DIN W48×H24mm, Indication only, LCD counter [LA8N Series]

■ Ordering information

LA 8 N - B N - L

※A shaded (▭) part is upgraded or added function.

Backlight	No mark	None
	L	Backlight function
Input type	N	No-voltage(Small signal) input
	V	Voltage input
	F	Free voltage input
Power supply	B	Internal lithium battery
Size	N	DIN W48×H24mm
Digit	8	99999999(8digit)
Item	LA	LCD Counter

■ Specifications

Model		LA8N-BN	LA8N-BN-L	LA8N-BV	LA8N-BV-L	LA8N-BF
Appearances & Dimensions		Upgrade CE c UL us [W48×H24×L54mm]				
Digit		8digit(Count up, down: -9999999 to 99999999 / Count up mode: 0 to 99999999)				
Digit size		W3.4 × H8.7mm				
Display method		LCD Zero Blanking type(Character height size: 8.7mm)				
Operation method		Count up, down mode	Count up mode	Count up, down mode	Count up mode	Count up mode
Power supply		Built-in battery				
Battery life cycle		Approx. over 7 years at 20℃				
Backlight power supply		—	24VDC±10%	—	24VDC±10%	—
Input method		No-voltage input		Voltage input		Free voltage input
Count input		Residual voltage: Max. 0.5VDC Short-circuit impedance: Max. 10kΩ Open-circuit impedance: Min. 750kΩ		"H" level voltage: 4.5-30VDC "L" level voltage: 0-2VDC		"H" level voltage: 24-240VAC /6-240VDC "L" level voltage:0-2VAC/0-2.4VDC
RESET input		No-voltage input		Voltage input		No-voltage input
Min. signal width		UP/DOWN, RESET input: Min. 20ms	RESET input: Min. 20ms	UP/DOWN, RESET input: Min. 20ms	RESET input: Min. 20ms	RESET input: Min. 20ms
Max. counting speed		1cps / 30cps / 1kcps				20cps
External set switch		SW1※1, SW2※2, SW3※3				SW1※1, SW3※3
Insulation resistance		Min. 100MΩ(at 500VDC megger)				
Dielectric strength※4		2,000VAC 60Hz for 1minute				
Vibration	Mechanical	0.75mm amplitude at frequency of 10 to 55Hz(for 1 min.) in each of X, Y, Z directions for 1 hour				
	Malfunction	0.3mm amplitude at frequency of 10 to 55Hz(for 1 min.) in each of X, Y, Z directions for 10 minutes				
Shock	Mechanical	300m/s^2(approx. 30G) in each of X, Y, Z directions for 3 times				
	Malfunction	100m/s^2(approx. 10G) in each of X, Y, Z directions for 3 times				
Environment	Ambient temperature	-10 to 55℃, storage: -25 to 65℃				
	Ambient humidity	35 to 85%RH, storage: 35 to 85%RH				
Protection		IP66(When using waterproof rubber for front panel)				
Accessory		Mounting bracket, Rubber waterproof ring				
Approval		CE c UL us				
Weight※5		Approx. 96g(Approx. 50g)				

※1: SW1 is the front panel RESET key enable/disable set switch. ※2: SW2 is the max. counting speed set switch.
※3: SW3 is the decimal point set switch.
※4: No-voltage input, voltage input: between terminals and the case / Free voltage input: between the free voltage input terminal and the RESET input terminal, between terminals and the case.
※5: This weight is with packaging and the weight in parentheses is only unit weight.
※Environment resistance is rated at no freezing or condensation.

■ Connections

Input type	No-backlight	Backlight
No-voltage input type	●LA8N-BN※1 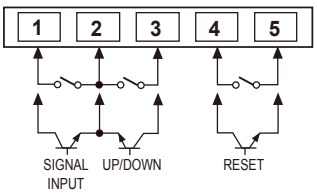	●LA8N-BN-L 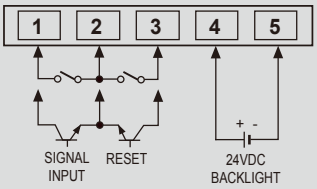 ※Terminal (1, 2, 3) and (4, 5) are insulated inside.
Voltage input type	●LA8N-BV※1 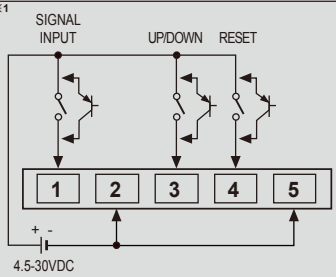	●LA8N-BV-L 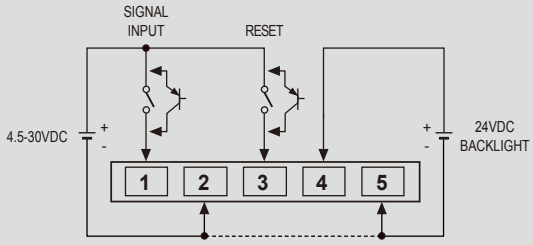
Free voltage input type	●LA8N-BF 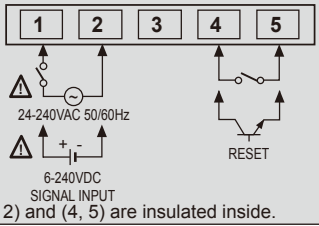 ※Terminal (1, 2) and (4, 5) are insulated inside.	—

※1: Terminal 2 and 5 are connected inside. (Non-isolated)
※Use reliable contacts enough to flow 5μA current.

DIN W48×H48mm, W72×H36mm, W72×H72mm counter/timer [CT Series]

■ Ordering information

CT 6 M - 2P 4 T

※A shaded (▭) part is upgraded or added function.

Communication	No mark	None
	T	RS 485
Power supply	4	100-240VAC 50/60Hz
	2	24VAC 50/60Hz / 24-48VDC
Output	2P	Dual preset
	1P	Single preset
	I	Indicator
Size	S	DIN W48×H48mm
	Y	DIN W72×H36mm
	M	DIN W72×H72mm
Digit	4	9999(4digit)
	6	999999(6digit)
Item	CT	Counter/Timer

※4digit type does not exist in the indicator type.

■ Specifications

Series			CTS		CTY	CTM
Digit			4	6	6	6
Model	Dual Preset		CT4S-2P□□	CT6S-2P□□	CT6Y-2P□□	CT6M-2P□□
	Single Preset		CT4S-1P□□	CT6S-1P□□	CT6Y-1P□□	CT6M-1P□□
	Single Preset		—	CT6S-1□□	CT6Y-1□□	CT6M-1□□
Appearances & Dimensions			Upgrade [W48×H48×L90mm]		Upgrade [W72×H36×L77mm]	Upgrade [W72×H72×L85mm]
Digit Size	Single Preset		11mm	10mm	10mm	13mm
	Single Preset		8mm	7mm	7mm	9mm
Power Supply	Single Preset		100-240VAC 50/60Hz			
	Single Preset		24VAC 50/60Hz / 24-48VDC			
Allowable voltage range			90 to 110% of rated voltage(AC Power type)			
Power consumption	Single Preset		Max. 12VA			
	Single Preset		AC: Max. 10VA / DC: Max. 8W			
INA/INB Max. counting speed			Selectable 1cps / 30cps / 1kcps / 5kcps / 10kcps			
Min. input signal width	Counter		Reset signal: Selectable 1ms, 20ms			
	Timer		INA, INB RESET: Selectable 1ms, 20ms			INA, INH, RESET, INHIBIT, BATCH RESET: Selectable 1ms, 20ms
Input			Selectable voltage input or No-voltage input [Voltage input] Input impedance is 5.4kΩ, 'H' level: 5-30VDC, 'L' level: 0-2VDC [No-voltage input] Short-circuit impedance: Max. 1kΩ, Residual voltage: Max. 2VDC			
One-shot output			Count, timer: Selectable 0.01s to 99.99s			
Control output	With-out com.	Contact output	Dual preset: SPST(1a) 2EA Single preset: SPDT(1c) 1EA		Dual preset: SPST(1a) 1EA, SPDT(1c) 1EA Single preset: SPDT(1c) 1EA	
		Solid state output	Dual preset: 1NPN open collector Single preset: 1NPN open collector			Dual preset:3NPN open collector Single preset:2NPN open collector
	With-out com.	Contact output	Dual preset: SPST(1a)2EA Single preset: SPDT(1c)1EA			Dual preset: SPST(1a), SPDT(1c) Single preset: SPDT(1c)
		Solid state output	—		Dual preset: - Single preset:1NPN open collector	Dual preset:2NPN open collector Single preset:2NPN open collector
	With-out com.	Contact output	250VAC 5A resistive load		250VAC 3A resistive load	250VAC 5A resistive load
		Solid state output	30VDC Max. 100mA Max.			
External sensor power			12VDC ±10%, 100mA Max.			
Memory retention			10years(When using non-volatile semiconductor memory type)			
Timer	Repeat error		Power ON Start: Max. ±0.01% ±0.05 sec Signal Start: Max. ±0.01% ±0.03 sec			
	SET error					
	Voltage error					
	Temperature error					
Insulation resistance			Min. 100MΩ(500VDC Megger)			
Dielectric strength			2,000VAC 50/60Hz for 1minute			
Noise strength (AC Power)			±2kV the square wave noise(pulse width:1μs) by the noise simulator			
Vibration	Mechanical		0.75mm amplitude at frequency of 10 to 55(for 1 min.)Hz in each of X, Y, Z directions for 1 hour			
	Malfunction		0.5mm amplitude at frequency of 10 to 55Hz(for 1 min.) in each of X, Y, Z directions for 10 minutes			
Shock	Mechanical		300m/s²(approx. 30G) in each of X, Y, Z directions for 3 times			
	Malfunction		100m/s²(approx. 10G) in each of X, Y, Z directions for 3 times			
Relay Life cycle	Mechanical		Min. 10,000,000 operations			
	Electrical		Min. 100,000 operations			
Protection			IP65(Front panel only)			
Environment	Ambient temperature		-10 to 55℃, storage: -25 to 65℃			
	Ambient humidity		35 to 85%RH, storage: 35 to 85%RH			
Approval			CE c UL us			
Unit weight			Approx. 159g		Approx. 149g	Approx. 253g

※Environment resistance is rated at no freezing or condensation.

■ Connections

⚠ Be careful that connections are different between communication model and non-communication model when wiring.

◎ CT□S-2P□

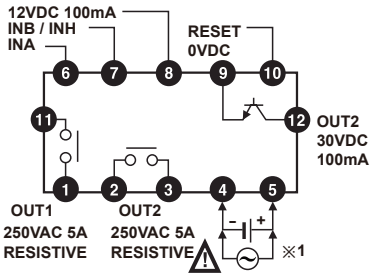

◎ CT□S-2P□T

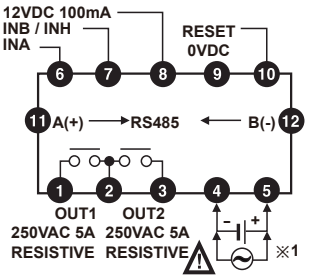

◎ CT□S-1P□

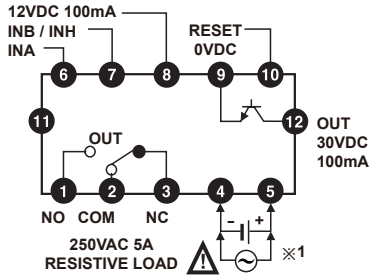

◎ CT□S-1P□T

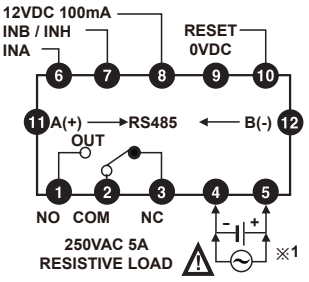

◎ CT6S-I□

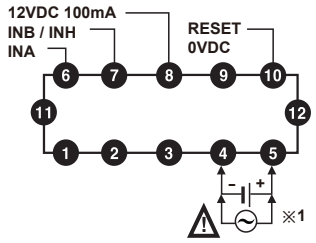

◎ CT6S-I□T

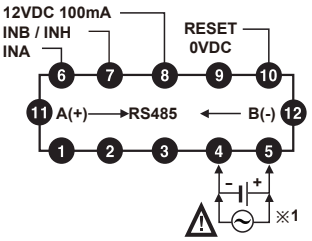

◎ CT6Y-2P□

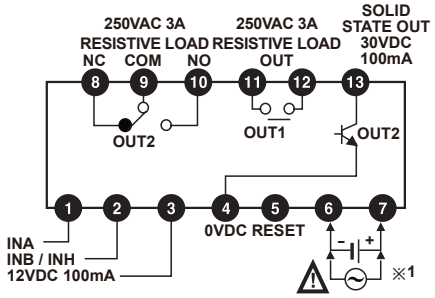

◎ CT6Y-2P□T

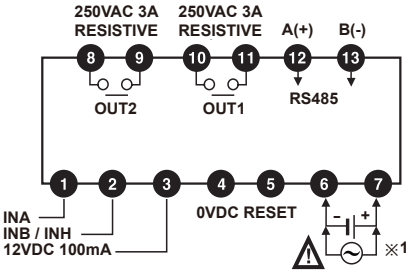

◎ CT6Y-1P□

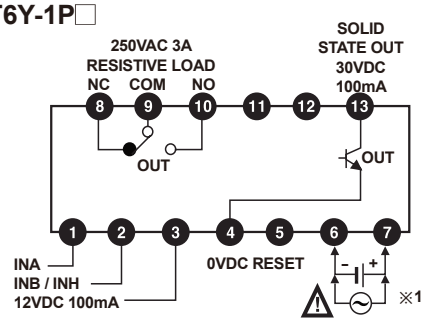

◎ CT6Y-1P□T

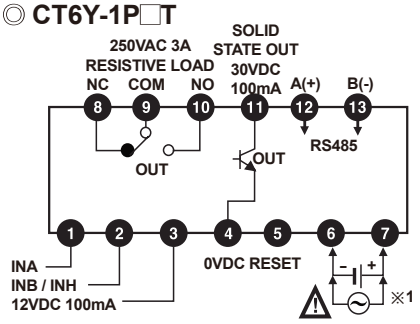

◎ CT6Y-I□

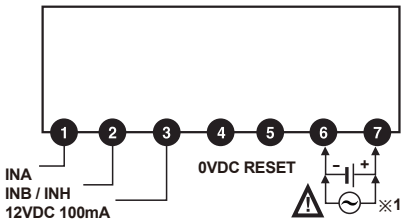

◎ CT6Y-I□T

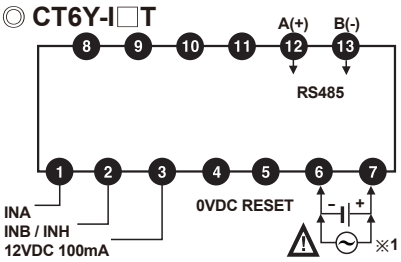

◎ CT6M-2P□

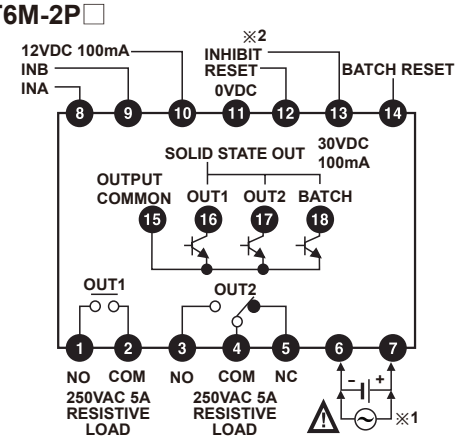

◎ CT6M-2P□T

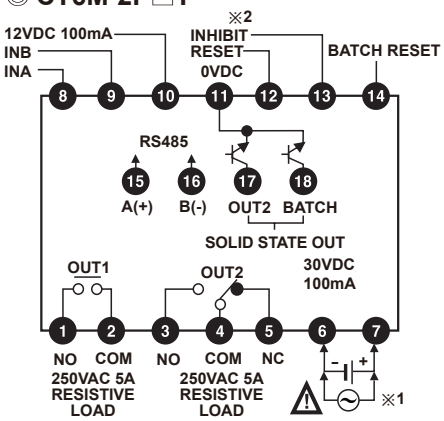

◎ CT6M-1P□

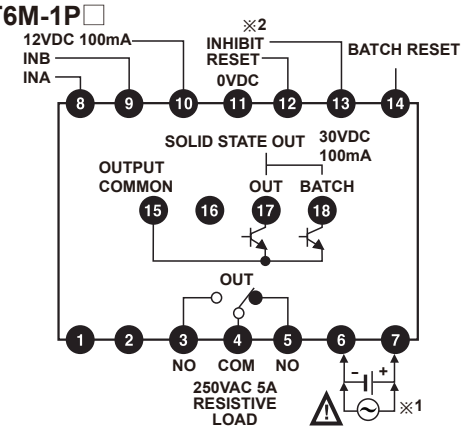

◎ CT6M-1P□T

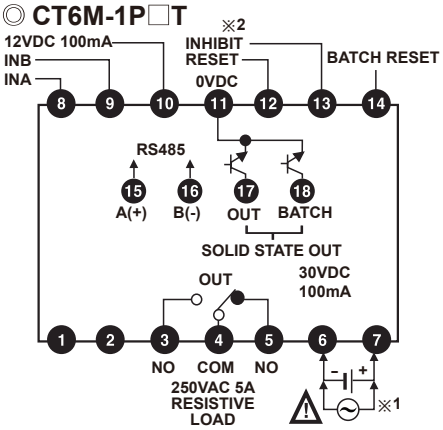

◎ CT6M-I□

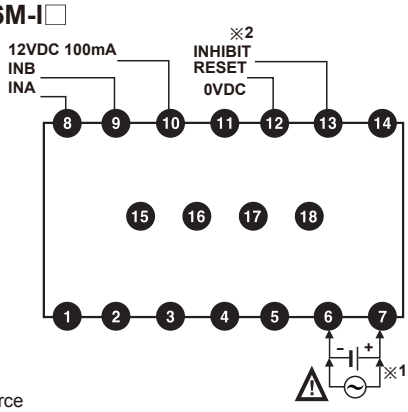

◎ CT6M-I□T

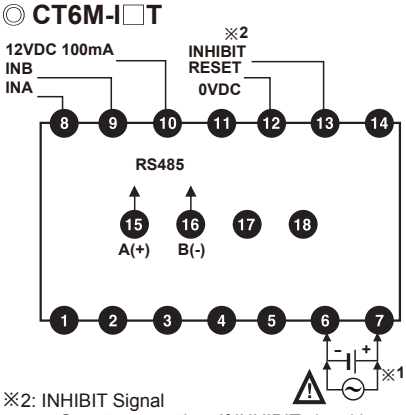

※1: Source
- AC Power: 100-240VAC 50/60Hz
- AC/DC Power: 24-48VDC, 24VAC 50/60Hz

※2: INHIBIT Signal
- Counter operation: If INHIBIT signal is applied, count input will be prohibited.
- Timer operation: If INHIBIT signal is applied, time progressing will stop.(HOLD)

DIN W72×H36mm of counter/timer with indication only [FXY Series]

■ Specifications

Model		FX4Y-I	FX6Y-I
Appearances & Dimensions		[W72×H36×L83mm]	
Digit		4digit	6digit
Digit size		W8×H14mm	W4×H8mm
Power supply	AC Voltage type	100-240VAC 50/60Hz	
	AC/DC Voltage type	12-24VAC 50/60Hz, 12-24VDC universal	
Allowable voltage range		90 to 110% of rated voltage	
Power consumption	AC Voltage type	Approx. 4.5VA(240VAC 60Hz)	
	AC/DC Voltage type	Approx. 4.5VA(24VAC 60Hz), Approx. 2.8W(24VDC)	
Max. counting speed		Selectable 1cps/30cps/2kcps/5kcps by internal DIP switch	
Min. input signal width	INHIBIT input	Min. 20ms	
	RESET input		
Input	CP1, CP2 input	No voltage input - Impedance at short-circuit: Max. 470Ω, Residual voltage at short-circuit: Max. 1VDC Impedance at open-circuit: Min. 100kΩ	
	RESET input		
Memory protection		Approx. 10 years(When using non-volatile semiconductor memory)	
Eexternal power		12VDC ±10% 50mA Max.	
Insulation resistance		Min. 100MΩ(at 500VDC megger)	
Dielectric strength		2000VAC 50/60Hz for 1 minute	
Noise strength	AC type	±2kV the square wave noise(pulse width: 1μs) by the noise simulator	
	DC type	±500V the square wave noise(pulse width: 1μs) by the noise simulator	
Vibration	Mechanical	0.75mm amplitude at frequency of 10 to 55Hz(for 1 min.) in each of X, Y, Z directions for 1hour	
	Malfunction	0.5mm amplitude at frequency of 10 to 55Hz(for 1 min.) in each of X, Y, Z directions for 10 minutes	
Shock	Mechanical	300m/s²(approx. 30G) in each of X, Y, Z directions for 3 times	
	Malfunction	100m/s²(approx. 10G) in each of X, Y, Z directions for 3 times	
Environment	Ambient temperature	10 to 55℃, storage: -25 to 65℃	
	Ambient humidity	35 to 85%RH, storage: 35 to 85%RH	
Approval			
Unit weight		Approx. 130g	Approx. 132g

※Environment resistance is rated at no freezing or condensation.

■ Connections

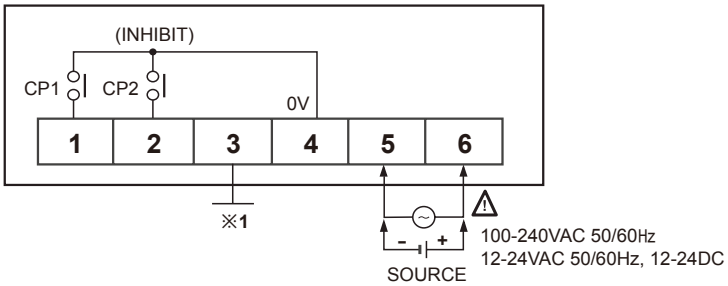

※1: It can be selected RESET or sensor power(+12VDC 50mA) by internal PIN operation.
※CP1, CP2: Input signal terminals when using as counter.
※INHIBIT(CP2): Time Hold terminal when using for timer(Connect switch to ❷+❹ from the external.)
※Operated by a Power ON Start method when it is used as a timer.

DIN W48×H48mm, Preset counter/timer [FXS Series]

■ Specifications

Model	Single preset		**FX4S**	—
	Indicator		—	**FX5S-I**
Appearances & Dimensions			[W48×H48×L91mm]	
Digit			4digit	5digit
Digit size			W3.8×H7.6mm	W4×H8mm
Power supply	AC Voltage type		100-240VAC 50/60Hz	
	AC/DC Voltage type		100-240VAC 50/60Hz, 12-24VDC universal	
Allowable voltage range			90 to 110% of rated voltage	
Power consumption	AC Voltage type		• Indication type: Approx. 4.7VA, • Single preset: Approx. 5.7VA(240VAC 60Hz)	
	AC/DC Voltage type		• Indication type: Approx. 4.5VA, • Single preset: Approx. 5.6VA(240VAC 60Hz) • Indication type: Approx. 2.8W, • Single preset: Approx. 3W(240VDC)	
Max. counting speed for CP1, CP2			Selectable 1cps/30cps/2kcps/5kcps by internal DIP switch	
Min. input signal width	INHIBIT input		Approx. 20ms	
	RESET input			
Input	CP1, CP2 input (INHIBIT)		Input logic is selectable [Voltage input] Input impedance: 5.4kΩ "H" level: 5-30VDC, "L" level: 0-2VDC [No-voltage input] Impedance at short-circuit: Max. 1kΩ, Residual voltage at short-circuit: Max. 2VDC, Impedance at open-circuit: Min. 100kΩ	
	RESET input			
One-shot output time			0.05 to 5sec	—
Control output	Contact	Type	SPDT(1c)	—
		Capacity	250VAC 3A at resistive load	—
	Solid state	Type	NPN open collector	—
		Capacity	30VDC Max. 100mA Max.	—
Memory protection			Approx. 10 years(When using non-volatile semiconductor memory)	
External power			12VDC±10% 50mA Max.	
Insulation resistance			Min. 100MΩ(at 500VDC megger)	
Dielectric strength			2000VAC 50/60Hz for 1 minute	
Noise strength	AC power		±2kV the square wave noise(pulse width: 1μs) by the noise simulator	
	DC power		±500V the square wave noise(pulse width: 1μs) by the noise simulator	
Vibration	Mechanical		0.75mm amplitude at frequency of 10 to 55Hz(for 1 min.) in each of X, Y, Z directions for 1 hour	
	Malfunction		0.5mm amplitude at frequency of 10 to 55Hz(for 1 min.) in each of X, Y, Z directions for 10 minutes	
Shock	Mechanical		300m/s²(approx. 30G) in each of X, Y, Z directions for 3 times	
	Malfunction		100m/s²(approx. 10G) in each of X, Y, Z directions for 3 times	
Relay life cycle	Mechanical		Min. 10,000,000 operations	
	Electrical		Min. 100,000 operations(250VAC 3A at resistive load)	
Environment	Ambient temperature		10 to 55℃, storage: -25 to 65℃	
	Ambient humidity		35 to 85%RH	
Approval				
Unit weight			Approx. 153g	Approx. 143g

※Environment resistance is rated at no freezing or condensation.

■ Connections

● **FX4S**

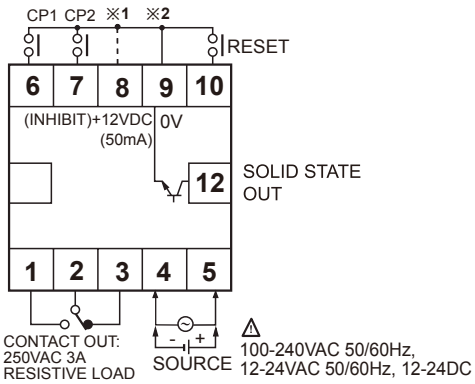

● **FX5S-I**

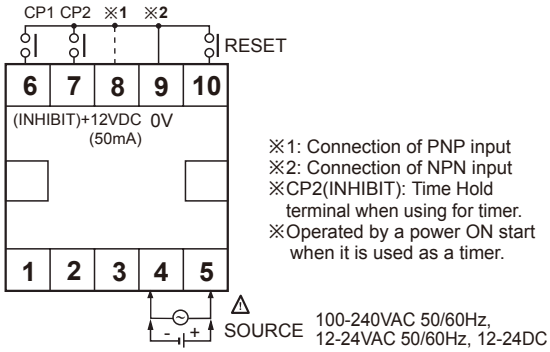

※1: Connection of PNP input
※2: Connection of NPN input
※CP2(INHIBIT): Time Hold terminal when using for timer.
※Operated by a power ON start when it is used as a timer.

DIN W72×H72, W48×H96, W144×H72mm counter/timer [FX/FXH/FXL Series]

■ Specifications

Model	Single preset	**FX4**	**FX6**	**FX4H**	—	—
	Dual preset	**FX4-2P**	**FX6-2P**	**FX4H-2P**	**FX4L-2P**	**FX6L-2P**
	Totalizer(Indicator)	**FX4-I**	**FX6-I**	**FX4H-I**	**FX4L-I**	**FX6L-I**
Appearances & Dimensions		[W72×H72×L112mm]		[W48×H96×L100mm]	[W144×H72×L112mm]	
Digit		4 digit	6 digit	4 digit	4 digit	6 digit
Digit size		W8×H14mm	W4×H8mm	W6×H10mm	W8×H14mm	
Power supply	AC Voltage type	100-240VAC 50/60Hz				
	AC/DC Voltage type	12-24VAC 50/60Hz, 12-24VDC universal				
Allowable voltage range		90 to 110% of rated voltage				
Power con-sumption	AC Voltage type	• Indicator type: Approx. 6VA • Single preset: Approx. 7VA • Dual preset: Approx. 8VA(240VAC 50/60Hz)				
	AC/DC Voltage type	• Indicator type: Approx. 5.8VA • Single preset: Approx. 6.8VA • Dual preset: Approx. 7.6VA(240VAC 50/60Hz) • Indicator type: Approx. 2.7W • Single preset: Approx. 3.3W • Dual preset: Approx. 3.8W(24VDC)				
Max. counting speed for CP1, CP2		Selectable 1cps/30cps/2kcps/5kcps by internal DIP switch				
Min. input signal width	RESET input	Approx. 20ms				
	INHIBIT input					
Input	CP1, CP2 input (INHIBIT)	Input logic is selectable [Voltage input] Input impedance: 5.4kΩ, "H" level: 5-30VDC, "L" level: 0-2VDC [No-voltage input] Impedance at short-circuit: Max. 1kΩ, Residual voltage at short-circuit: Max. 2VDC, Impedance at open-circuit: Min. 100kΩ				
	RESET input					
One-shot output time		• Single preset type - 0.05 to 5sec. • Dual preset type - 1st. output 0.5sec. fixed, 2st. output: 0.05 to 5sec.				
Control output	Contact: Type	Single preset type: SPDT(1c), Dual preset type: 1st output SPDT(1c), 2nd output SPDT(1c)				
	Contact: Capacity	250VAC 3A at resistive load				
	Solid-state: Type	Single preset: 1 NPN open collector Dual preset: 1st output 1 NPN open collector, 2nd output 1 NPN open collector				
	Solid-state: Capacity	30VDC Max. 100mA Max.				
Memory protection		Approx. 10 years(When using non-volatile semiconductor memory)				
External sensor power		12VDC±10% 50mA Max.				
Environ-ment	Ambient temperature	-10 to 55℃, storage: -25 to 65℃				
	Ambient humidity	35 to 85%RH, storage: 35 to 85%RH				
Insulation resistance		Min. 100MΩ(at 500VDC megger)				
Dielectric strength		2000VAC 50/60Hz for 1 minute				
Noise strength	AC power	±2kV the square wave noise(pulse width: 1μs) by the noise simulator				
	DC power	±500V the square wave noise(pulse width: 1μs) by the noise simulator				
Vibration	Mechanical	0.75mm amplitude at frequency of 10 to 55Hz(for 1 min.) in each of X, Y, Z directions for 1 hour				
	Malfunction	0.5mm amplitude at frequency of 10 to 55Hz(for 1 min.) in each of X, Y, Z directions for 10 minutes				
Shock	Mechanical	300m/s²(approx. 30G) in each of X, Y, Z directions for 3 times				
	Malfunction	100m/s²(approx. 10G) in each of X, Y, Z directions for 3 times				
Relay life cycle	Mechanical	Min. 10,000,000 operations				
	Electrical	Min. 100,000 operations at 250VAC 2A(resistive load)				
Approval		c UL us (Except for AC/DC power type)				
Weight※1		FX4: Approx. 385g (approx. 249g) FX4-2P: Approx. 396g (approx. 258g) FX4-I : Approx. 353g (approx. 216g)	FX6: Approx. 395g (approx. 259g) FX6-2P : Approx. 398g (approx. 262g) FX6-I : Approx. 351g (approx. 214g)	FX4H: Approx. 349g(approx. 234g) FX4H-2P: Approx. 375g(approx. 261g) FX4H-I: Approx. 321g(approx. 206g)	FX4L-2P: Approx. 651g (approx. 467g) FX4L-I : Approx. 593g (approx. 400g)	FX6L-2P: Approx. 678g (approx. 494g) FX6L-I : Approx. 586g (approx. 404g)

※1: This weight is with packaging and the weight in parentheses is only unit weight.
※Environment resistance is rated at no freezing or condensation.

■ Connections

● FX□-2P

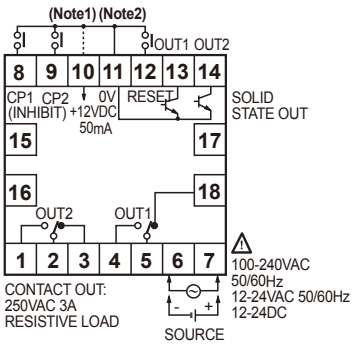

● FX□

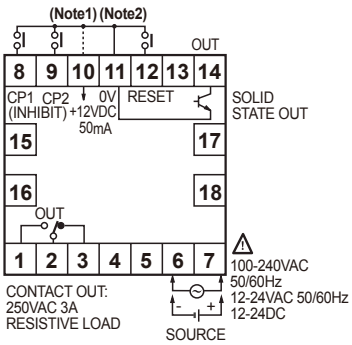

● FX□-I

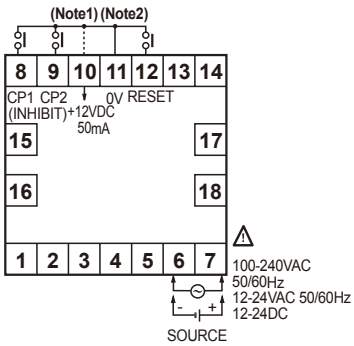

● FX4H-2P

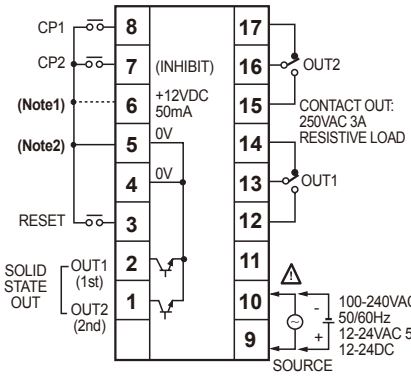

● FX4H

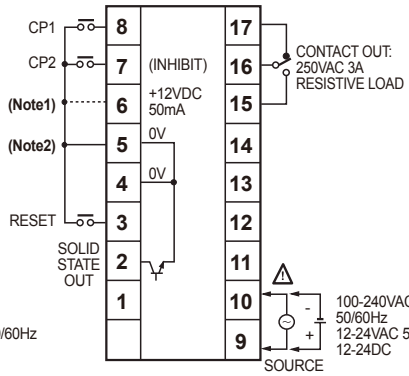

● FX4H-I

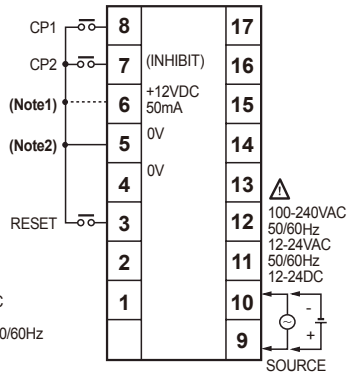

● FX□L-2P

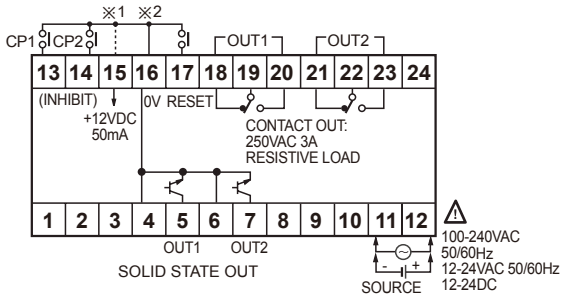

● FX□L-I

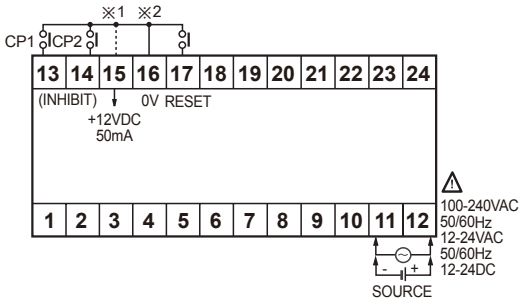

※ CP2(INHIBIT): Time hold terminal when using for timer.
※ It is operated by power ON start type when using for timer.

※ **1. Connection for PNP input**
2. Connection for NPN input

DIN W48×H48mm 8 Pin plug counter [FS Series]

■ Specifications

Model	Single preset		**FS4A**	—
	Totalizer(Indicator)		—	**FS5B**
Appearances & Dimensions			※ **8Pin plug type** [W48×H48×L85mm]	
Digit			4digit	5digit
Digit size			W3.8×H7.6mm	W4×H8mm
Power supply	AC Voltage type		100-240VAC 50/60Hz	
	AC/DC Voltage type		100-240VAC 50/60Hz, 12-24VAC/DC universal(option)	
Allowable voltage range			90 to 110% of rated voltage	
Power consumption	AC Voltage type		• Indicator: Approx. 4.7VA • Single preset: Approx. 5.7VA(240VAC 50/60Hz)	
	AC/DC Voltage type		• Indicator: Approx. 4.5VA • Single preset: Approx. 5.5VA(240VAC 50/60Hz) • Indicator: Approx. 2.8W • Single preset: Approx. 3W(24VDC)	
Max. counting speed for CP1, CP2			Selectable 1cps/30cps/2kcps/5kcps by internal DIP switch	
Min. input signal width	RESET input		Approx. 20ms	
Input	COUNT IN		No-voltage input • Impedance at short-circuit: Max. 470kΩ • Residual voltage at short-circuit: Max. 1VDC • Impedance at open-circuit: Min. 100kΩ	
	RESET			
One-shot output time			0.05 to 5sec.	
Control output	Contact	Type	SPST(1a)	—
		Capacity	250VAC 3A resistive load	—
Memory protection			Approx. 10 years(When using non-volatile semiconductor memory)	
External power			12VDC ±10% 50mA max.	
Insulation resistance			100MΩ(at 500VDC megger)	
Dielectric strength			2000VAC 50/60Hz for 1 minute	
Noise strength	AC power		±2kV the square wave noise(pulse width: 1μs) by the noise simulator	
	DC power		±500V the square wave noise(pulse width: 1μs) by the noise simulator	
Vibration	Mechanical		0.75mm amplitude at frequency of 10 to 55Hz(for 1 min.) in each of X, Y, Z directions for 1 hour	
	Malfunction		0.5mm amplitude at frequency of 10 to 55Hz(for 1 min.) in each of X, Y, Z directions for 10 minutes	
Shock	Mechanical		300m/s²(approx. 30G) in each of X, Y, Z directions for 3 times	
	Malfunction		100m/s²(approx. 10G) in each of X, Y, Z directions for 3 times	
Relay life cycle	Mechanical		Min. 10,000,000 operations	—
	Electrical		Min. 100,000 operations(250VAC 3A at resistive load)	—
Environment	Ambient temperature		-10 to 55℃, storage: -25 to 65℃	
	Ambient humidity		35 to 85%RH, storage: 35 to 85%RH	
Unit weight			Approx. 130g	Approx. 120g

※Environment resistance is rated at no freezing or condensation.

■ Connections

● **FS4A**

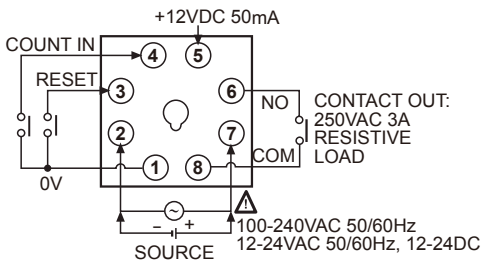

● **FS5B**

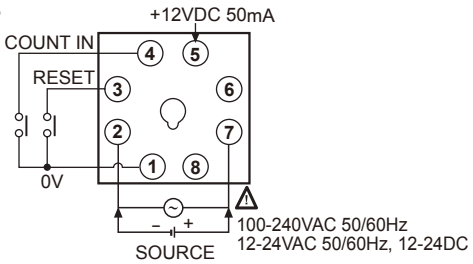

DIN W72×H72, W144×H72mm of 8 digit Up/Down counter [F/L Series]

■ Specifications

Model	Single preset		**F8A**	**L8A**
	Totalizer(Indicator)		**F8B**	**L8B**
Appearances & Dimensions			[W72×H72×L112mm]	[W144×H72×L112mm]
Digit			8digit	
Digit size			W4×H8mm	W6.3×H10mm
Power supply			100-240VAC 50/60Hz, 12-24VAC/DC(Option)	
Allowable voltage range			90 to 110% of rated voltage	
Power consumption	AC Voltage type		• Indicator: Approx. 5.4VA • Single preset: Approx. 6.1VA(240VAC 50/60Hz)	
	AC/DC Voltage type		• Indicator: Approx. 5.5VA • Single preset: Approx. 6.3VA(240VAC 50/60Hz) • Indicator: Approx. 2.6W • Single preset: Approx. 3.1W(24VDC)	
Max. counting speed			Selectable 1cps/30cps/2kcps/5kcps by internal DIP switch	
Min. signal width	RESET input		Approx. 20ms	
Input type	CP1, CP2 Input		[Voltage input] Input impedance: 5.4kΩ, "H" level voltage: 5-30VDC, "L" level voltage: 0-2VDC [No-Voltage input] Impedance at short-circuit: Max. 1kΩ, Residual voltage at short-circuit: Max. 2VDC, Impedance at open-circuit: Min. 100kΩ	
	RESET input			
One-shot output time			0.05 to 5sec	
Control output	Contact	Type	Single preset: SPDT(1c)	
		Capacity	250VAC 3A resistive load	
	Solid-state	Type	Single preset type: 1 NPN open collector	
		Capacity	30VDC Max. 100mA Max.	
Memory protection			Approx. 10 years(When using non-volatile semiconductor memory)	
External power			12VDC±10% 50mA Max.	
Insulation resistance			100MΩ(at 500VDC megger)	
Noise strength	AC power		±2kV the square wave noise(pulse width: 1μs) by the noise simulator	
	DC power		±500V the square wave noise(pulse width: 1μs) by the noise simulator	
Vibration	Mechanical		0.75mm amplitude at frequency of 10 to 55Hz(for 1 min.) in each of X, Y, Z directions for 1 hour	
	Malfunction		0.5mm amplitude at frequency of 10 to 55Hz(for 1 min.) in each of X, Y, Z directions for 10 minutes	
Shock	Mechanical		300m/s²(approx. 30G) in each of X, Y, Z directions for 3 times	
	Malfunction		100m/s²(approx. 10G) iin each of X, Y, Z directions for 3 times	
Relay life cycle	Mechanical		Min. 10,000,000 operations	
	Electrical		Min. 100,000 operations(250VAC 3A at resistive load)	
Environment	Ambient temperature		-10 to 55℃, storage: -25 to 65℃	
	Ambient humidity		35 to 85%RH, storage: 35 to 85%RH	
Unit weight			F8A: Approx. 287g, F8B: Approx. 253g	L8A: Approx. 500g, L8B: Approx. 446g

※Environment resistance is rated at no freezing or condensation.

■ Connections

● F8A

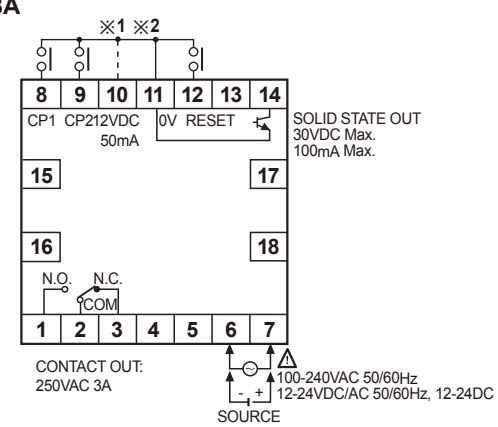

● F8B

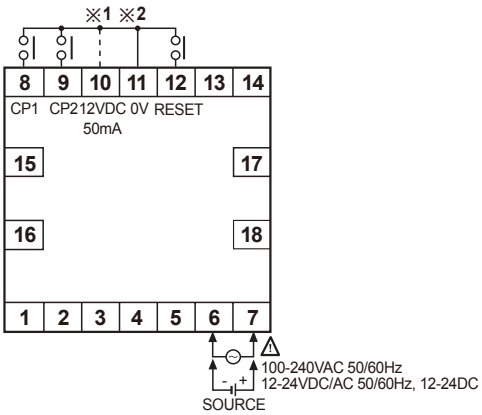

● L8A

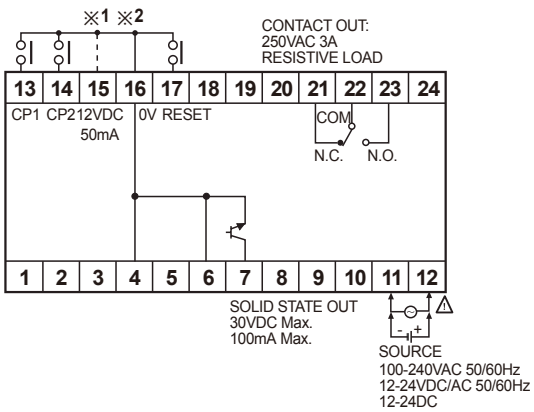

● L8B

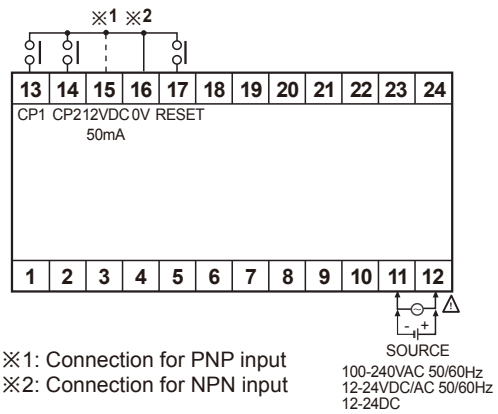

※1: Connection for PNP input
※2: Connection for NPN input

DIN W72×H72, W144×H72mm of Up / Down / Up·Down measure counter [FM/LM Series]

■ Specifications

Model	Single preset	**F4AM**	**F6AM**	—	—
	Dual preset	**F4AM-2P**	**F6AM-2P**	**L4AM-2P**	**L6AM-2P**
	Totalizer(Indicator)	**F4BM**	**F6BM**	**L4BM**	**L6BM**
Appearances & Dimensions		[W72×H72×L112mm]		[W144×H72×L112mm]	
Digit		4digit	6digit	4digit	6digit
Digit size		W8×H14mm	W4×H8mm	W8×H14mm	
Power supply	AC Voltage type	100-240VAC 50/60Hz			
	AC/DC Voltage type	100-240VAC 50/60Hz, 12-24VDC universal			
Allowable voltage range		90 to 110% of rated voltage			
Power con-sumption	AC Voltage type	• Indicator: Approx. 4.7VA • Single preset: Approx. 5.6VA • Dual preset: Approx. 6.5VA(240VAC 50/60Hz)			
	AC/DC Voltage type	• Indicator: Approx. 5.1VA • Single preset: Approx. 6VA • Dual preset: Approx. 6.5VA(24VAC 50/60Hz) • Indicator: Approx. 2.7W • Single preset: Approx. 3.3W • Dual preset: Approx. 3.8W(24VDC)			
Max. counting speed		Selectable 1cps/30cps/2kcps/5kcps by internal DIP switch			
Min. signal width		Approx. 20ms			
Input type	CP1,CP2 input	Input logic is selectable [Voltage input] Input impedance: 5.4kΩ, "H" level voltage: 5-30VDC, "L" level voltage: 0-2VDC [No-Voltage input] Impedance at short-circuit: Max. 1kΩ, Residual voltage at short-circuit: Max. 2VDC, Impedance at open-circuit: Min. 100kΩ			
	RESET input				
One-shot output time		• Single preset: 0.5sec. • Dual preset: 0.05 to 5sec.			
Control output	Con-tact: Type	Single preset: SPDT(1c) Dual preset: Single preset SPST(1a), Dual preset SPST(1a)		Dual preset: Single preset SPDT(1c), Dual preset SPDT(1c)	
	Con-tact: Capacity	250VAC 3A resistive load			
	Solid-state: Type	Single preset: 1 NPN open collector output, Dual preset: 2 NPN open collector output			
	Solid-state: Capacity	30VDC Max. 100mA Max.			
Memory protection		Approx. 10 years(When using non-volatile semiconductor memory)			
External power		12VDC±10% 50mA Max.			
Insulation resistance		100MΩ(at 500VDC megger)			
Dielectric strength		2000VAC 50/60Hz for 1 minute			
Noise strength	AC power	±2kV the square wave noise(pulse width: 1μs) by the noise simulator			
	DC power	±500V the square wave noise(pulse width: 1μs) by the noise simulator			
Vibration	Mechanical	0.75mm amplitude at frequency of 10 to 55Hz(for 1 min.) in each of X, Y, Z directions for 1 hour			
	Malfunction	0.5mm amplitude at frequency of 10 to 55Hz(for 1 min.) in each of X, Y, Z directions for 10 minutes			
Shock	Mechanical	300m/s²(approx. 30G) in each of X, Y, Z directions for 3 times			
	Malfunction	100m/s²(approx. 10G) in each of X, Y, Z directions for 3 times			
Relay life cycle	Mechanical	Min. 10,000,000 operations			
	Electrical	Min. 100,000 operations(250VAC 3A at resistive load)			
Environ-ment	Ambient temperature	-10 to 55℃, storage: -25 to 65℃			
	Ambient humidity	35 to 85%RH, storage: 35 to 85%RH			
Unit weight	AC Voltage type	F4AM: Approx. 273g, F6AM: Approx. 280g, F4AM-2P: Approx. 275g, F6AM-2P: Approx. 282g, F4BM: Approx. 229g, F6BM: Approx. 236g, L4AM: Approx. 505g, L6AM-2P: Approx. 533g, L4AM-2P: Approx. 438g, L6BM: Approx. 445g			
	AC/DC Voltage type	F4AM: Approx. 268g, F6AM: Approx. 275g, F4AM-2P: Approx. 270g, F6AM-2P: Approx. 287g, F4BM: Approx. 224g, F6BM: Approx. 231g, L4AM-2P: Approx. 511g, L6AM-2P: Approx. 538g, L4BM-2P: Approx. 444g, L6BM: Approx. 450g			

※Environment resistance is rated at no freezing or condensation.

▣ Connections

● F4AM-2P / F6AM-2P

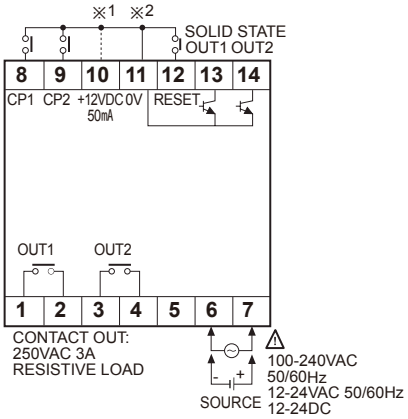

● F4AM / F6AM

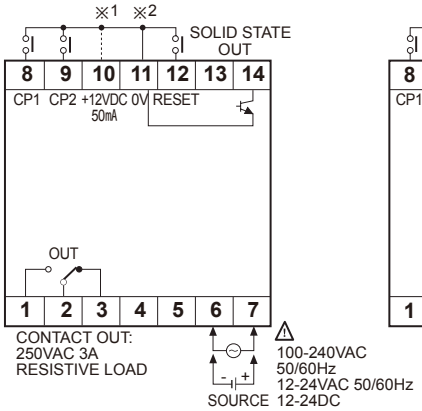

● F4BM / F6BM

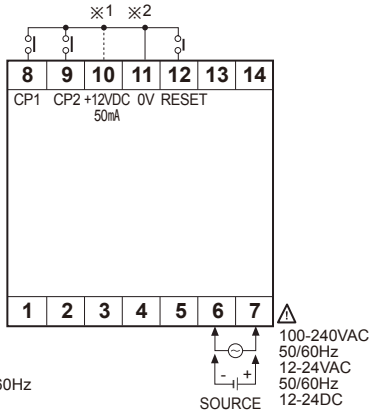

● L4AM-2P / L6AM-2P

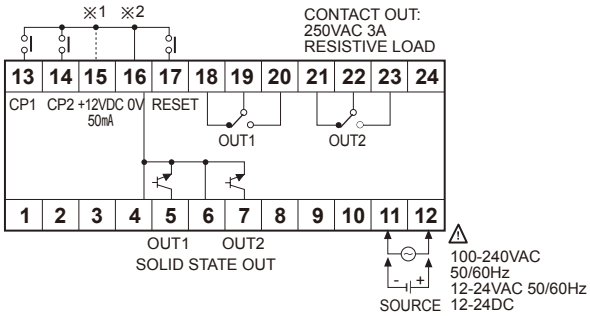

● L4BM / L6BM

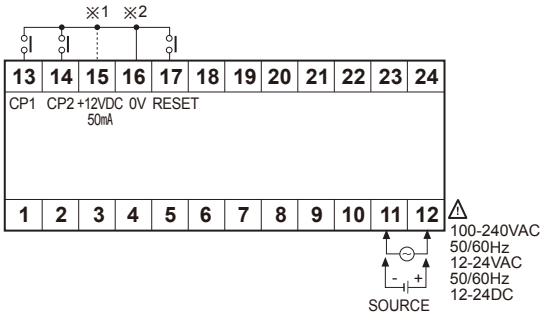

※1: Connection for PNP input in contact input
※2: Connection for NPN input in contact input