Serial/Parallel/RS485 communication input type Display Unit [DS / DA Series]

■ Ordering information

D S 16 — R S

Unit type	S	Basic unit: Serial input
	P	Basic unit: Parallel input
	T	Basic unit: RS485 communication input
	D※2	Basic unit: Temp./Humi. sensor module input
	DT※2	Basic unit: Temp./Humi. sensor module input+RS485 com. output
	R※2	Basic unit: Pt temp. sensor input
	DR※2	Basic unit: Pt temp. sensor input+RS485 com. output
	E	Expansion unit
	No-mark	Unit-display unit
Display color	R	Red
	G	Green
Size (character size)	16※1	W16×H24mm (W9.0×H16.0mm)
	22	W20×H33mm (W11.2×H22.5mm)
	40	W40×H60mm (W22.4×H40.0mm)
	60	W60×H96mm (W33.6×H60.0mm)
Display method	S	7 Segment
	A	16 Segment
	U※3	Unit-display unit
Item	D	Display unit

※1: The '16' size model does not have the parallel input model and does not support 16 Segment display method.
※2: Temp./Humi. module input, Temp./Humi. module input + RS485 com. output, Pt sensor input, Pt sensor input+RS485 com. output models will be available.
※3: Unit-display unit has only 16, 22 size.
※4: Temp./Humi. sensor module input, Temp./Humi. sensor module input+RS485 com. output, Pt temp. sensor input, Pt temp. sensor input+RS485 com. output models support only red display color.

■ Specifications

Model	Basic unit	**DS16-□S/T/D**	**D□22-□S/P/T/D/R**	**D□40-□S/P/T/D/DT/R/RT**	**D□60-□S/P/T/D/DT/R/RT**
	Expansion unit	**DS16-□E**	**D□22-□E**	**D□40-□E**	**D□60-□E**
Appearances		NEW	NEW	NEW	NEW
Input method		D□□-□S: Serial			
		D□□-□P: Parallel(Dynamic Parallel 1, Dynamic Parallel 2)			
		D□□-□T: RS485 communication(Modbus protocol)			
		DS□-RD/RDT: Temp./Humi. sensor module(THD-RM-S) input(I^2C input type)			
		DS□-RR/RRT: Pt temp. sensor input(supports DPt100Ω, JPt 100Ω)※1			
Display color※2		Red, Green(selectable by model)			
Power supply		12-24VDC			
Allowable voltage range		90 to 110% of rated voltage			

■ Specifications

Model	Basic unit	**DS16-□S/T/D**	**D□22-□S/P/T/D/R**	**D□40-□S/P/T/D/DT/R/RT**	**D□60-□S/P/T/D/DT/R/RT**
	Expansion unit	**DS16-□E**	**D□22-□E**	**D□40-□E**	**D□60-□E**
Current consumption	Red: D□□-RS/RP/RT/RE	Max. 20mA	Max. 25mA	Max. 55mA	Max. 65mA
	Red: D□□-RD/RDT/RR/RRT	Max. 40mA	Max. 40mA	Max. 55mA	Max. 65mA
	Green	Max. 15mA	Max. 20mA	Max. 40mA	Max. 45mA
Character size		W9×H16mm	W11.2×H22.5mm	W22.4×H40mm	W33.6×H60mm
Max. Clock※3, ※4		• Serial input: Max. 2kHz • Parallel input: Dynamic Parallel 1: Max. 3kHz, Dynamic Parallel 2: Max. 1.5kHz			
Input logic※3		Selectable positive logic(PNP), negative logic(NPN)(change by the function set switch)			
Input resistance※3		20kΩ			
Input level※3		High: 4.5-24VDC, Low: 0-1.2VDC			
Display character※5		64 characters and signs(0 to 9, A to Z, 27 signs, decimal point)			
Display temp./humi. range		DS□-RD/RDT temperature: -19.9 to 60.0℃, humidity: 00.0 to 99.9%RH			
		DS□-RR/RRT temperature: -50.0 to 400.0℃ or -58.0 to 752.0℉			
Display accuracy		DS□-RD/RDT temperature: ±1.0℃(room temperature※6), humidity: ±2.0%RH(10 to 90%RH, room temperature※6)			
		DS□-RR/RRT: ±0.5% F.S.			
Output		—		RS485 com. output(Modbus RTU)※7	
The number of max. multi-stange connections		Serial/RS485 com. input: 24 units			
		Parallel: Dynamic Parallel 1 : 6 units(4Bit), 4 units(6Bit)/ Dynamic Parallel 2 : 24 units(6Bit)			
		Temp./Humi. sensor module input(+RS485 com. output): 6 units(3 units for temp. display, 3 units for humidity display, except unit-display unit)			
		Pt temperature sensor input(+RS485 com. output): 4EA(except unit-display unit)			
Noise resistance		±500V the square wave noise (pusel width: 1μs) by the noise simulator			
Envir-onment	Ambient temperature	-10 to 55℃, storage: -25 to 65℃ (for THD-RM-S, -19.9 to 60℃, storage: -19.9 to 60℃)			
	Ambient humidity	35 to 85%RH (for THD-RM-S, 0 to 99.9%, storage: 0 to 99.9%)			
Accessory	Basic unit	Cap: right/left 1EA	Cap: right/left 1EA, Connector : 1EA	Connector: 1EA※8	
	Expansion unit	—		Ribbon cable: 1EA(50mm)	
	DS□-RD/RDT	Temp./Humi. sensor module(THD-RM-S)			
Protection		IP40 (front part)			
Approval※5		CE			
Weight※9	D□□-□S/P/T/R/RT	Approx. 53g (approx. 12g)	Approx. 58g (approx. 17g)	Approx. 70g (approx. 28g)	Approx. 115g (approx. 60g)
	DS□-RD/RDT	Approx. 168g (approx. 12g)	Approx. 173g (approx. 17g)	Approx. 184g (approx. 28g)	Approx. 216g (approx. 60g)
	D□□-□E	Approx. 77g (approx. 12g)※10	Approx. 92g (approx. 17g)※10	Approx. 70g (approx. 28g)	Approx. 115g (approx. 60g)

※1: 16 size model does not support Pt temperature sensor input.
※2: Temp./Humi. sensor module input, Temp./Humi. sensor module input+RS485 com. output, Pt temp. sensor input, Pt temp. sensor input+RS485 com. output models support only red display color.
※3: It is only for Serial, Parallel input models.
※4: Max. Clock is for 1:1 of duty ratio (ON, OFF ratio).
※5: It is only for Serial, Parallel, RS485 com. input models.
※6: Room temperature 23℃±5℃
※7: RS485 com. output supports only DS40-R□T, DS60-R□T models.
※8: It is only for Parallel input model.
※9: The weight is with packaging and the weight in parentheses is only unit weight.
※10: This is 3 units' weight as packaging unit and the weight in parentheses is only unit weight.
※Environment resistance is rated at no freezing or condensation.

▣ Dimensions

(unit : mm)

◎ DS16

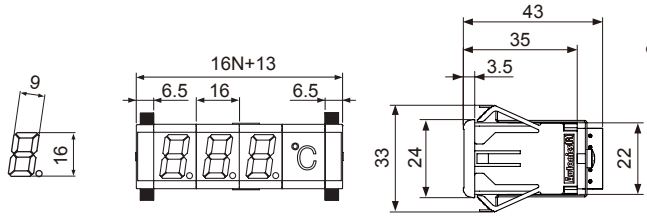

● **Panel cut-out**

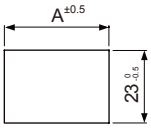

※N: Number of units
※Panel thickness: 1.5 to 4mm

Units(N)	A(16N+11)
1	27
2	43
3	59
4	75
5	91
:	:

◎ DS22/DA22

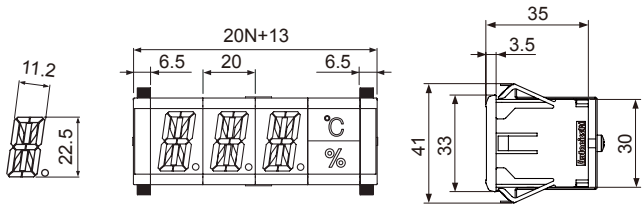

● **Panel cut-out**

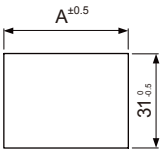

Units(N)	A(20N+11)
1	31
2	51
3	71
4	91
5	111
:	:

◎ DS40/DA40

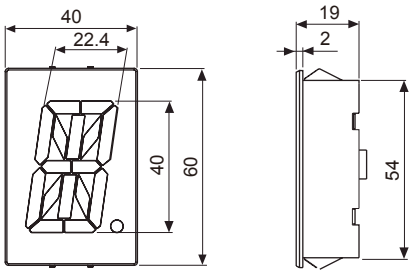

● **Panel cut-out**

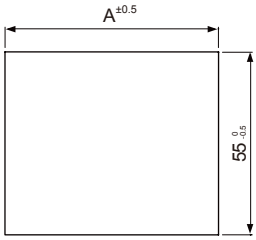

Units(N)	A(40N+2)
1	38
2	78
3	118
4	158
5	198
6	238
7	278
8	318
9	358
10	398
:	:

◎ DS60/DA60

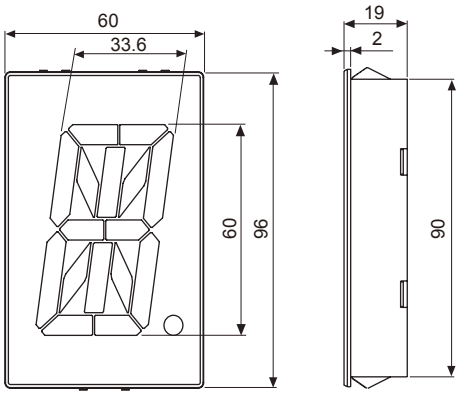

● **Panel cut-out**

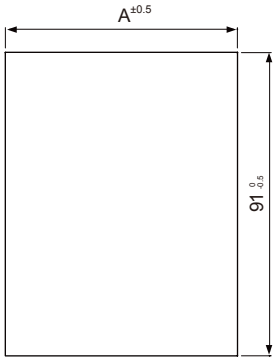

※N: Number of units
※Panel thickness: 1.5 to 4mm

Units(N)	A(60N-3)
1	57
2	117
3	177
4	237
5	297
6	357
7	417
8	477
9	537
10	597
:	:

7 Segment Display Unit large(W32×H57mm) and high bright LED [D1SC-N / D1SA Series]

■ Specifications

Model		D1SC-N	D1SA-RN	D1SA-GN※1
Appearances				
Display method		7 Segment LED display(red)		7 Segment LED display(green)
Power supply		12-24VDC		
Allowable voltage range		90 to 110% of rated voltage		
Current consumption		Max. 70mA	Max. 35mA	
Character size		W32 × H57mm	W11×H22mm	
Display character※2		• Decimal number : 0 to 9, decimal point • Hexadecimal number : 0 to 9, A to F, decimal point		
Input		• Parallel : Parallel 4bit data, latch, zero blanking, decimal point • Serial : Serial 4bit or 5bit data, clock, zero blanking, latch, decimal point(for 4 bit input)		
Input resistance		12kΩ	20kΩ	
Input level		High : 4.5-24VDC, Low : 0-1.2VDC		
Max. response CLOCK		Max. 3kHz		
Output		Data output (serial input), zero blanking output		
Input logic		Selectable positive logic (PNP) or negative logic (NPN) (D1SC-N: by the function set switch, D1SA Series: by inner soldering)		
Noise strength		±300V the square wave noise (pulse width: 1us) by the noise simulator		
Environ-ment	Ambient temperature	0 to 60℃, storage : -10 to 85℃		
	Ambient humidity	35 to 85%RH, storage: 35 to 85%RH		
Accessory		Housing[5264-10], Terminal[5263(PBT)], Sub-PCB for multi-stage connection	Connector(CT-10S), Cap	
Unit weight		Approx. 100g	Approx. 22g(including right/left caps)	

※1: It is option
※2: Only D1SC-N supports Minus displaying.
※The max. response CLOCK is when the duty ratio is 1:1.
※Environment resistance is rated at no freezing or condensation.

■ Dimensions

(unit: mm)

◎ D1SC-N

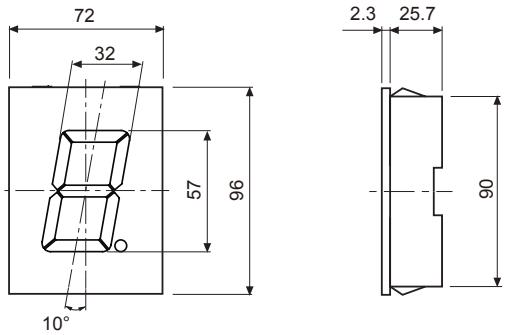

● Panel cut-out

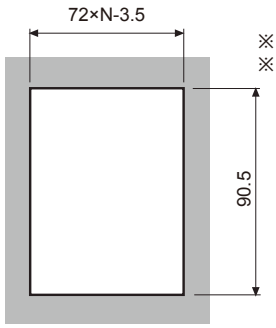

※N: Number of units
※Panel thickness: 2 to 4mm

◎ D1SA Series

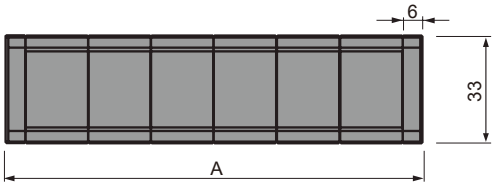

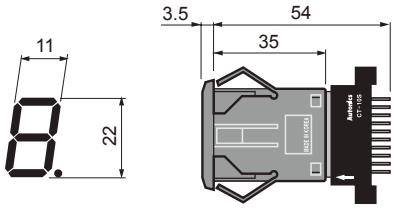

● Panel cut-out

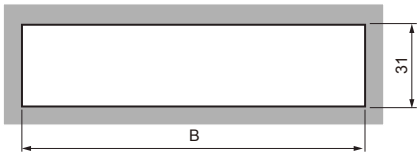

● Panel cut-out chart

Digit(N)	A(20×N+12)	B(20×N+10)
1	32	30±0.1
2	52	50±0.1
3	72	70±0.1
4	92	90±0.1
5	112	110±0.1
6	132	130±0.1
7	152	150±0.1
8	172	170±0.1

Small Display Unit for vivid display(W11×H20mm) and various 60 characters and signs [D1AA Series]

■ Specifications

Model		D1AA-RN	D1AA-GN※1
Appearances			
Display method		16 Segment LED display(Red)	16 Segment LED display(Green)
Power supply		12-24VDC	
Allowable voltage range		90 to 110% of rated voltage	
Current consumption		Max. 32mA	
Display character		60 characters (0 to 9, A to Z, symbol(24 kinds), decimal point)	
Character size		W11×H22mm	
Input		•Parallel : Parallel 6bit data, latch, decimal point •Serial : Serial 6bit or 7bit data, clock, latch, decimal point(for 6bit input)	
Input level		High : 4.5-24VDC, Low : 0-1.2VDC	
Max. response CLOCK		Max. 3kHz	
Input resistance		20kΩ	
Output		Data output(Serial input)	
Input logic		Selectable and changeable positive(PNP) or negative(NPN)(By inner soldering)	
Noise strength		The square wave noise by simulator(pulse width:1 μs) ±300V	
Environ-ment	Ambient temperature	0 to 60℃, storage : -10 to 85℃	
	Ambient humidity	35 to 85%RH, storage: 35 to 85%RH	
Sold separately		Connector	
Unit weight		Approx. 22g(including right/left caps)	

※1: This is option.
※The max. clock is when the duty ratio is 1:1.
※Environment resistance is rated at no freezing of condensation.

■ Dimensions

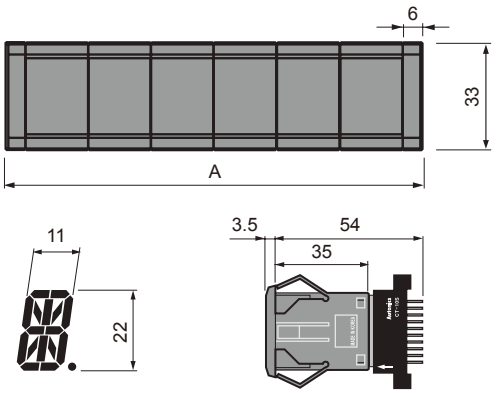

● **Panel cut-out**

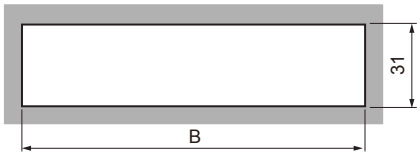

● **Panel cut-out chart**

Digit(N)	Dimension A(20×N+12)	Dimension B(20×N+10)
1	32	30±0.1
2	52	50±0.1
3	72	70±0.1
4	92	90±0.1
5	112	110±0.1
6	132	130±0.1
7	152	150±0.1
8	172	170±0.1

Upgraded Display Unit from D4Y, D4W [D5Y / D5W Series]

■ Specifications

Model		**D5Y-M**	**D5W-M**	**D5W-MX**
Appearances & Dimensions		[W72×H36×L91mm]	[W96×H48×L99.5mm]	
Power supply		12-24VDC		110/220VAC 50/60Hz
Allowable voltage range		90 to 110% of rated voltage		
Current consumption		Max. 1.1W		Max. 2VA
Character size		W7×H14mm		
Display method		7Segment LED display (red)		
Display digit		Selectable 4digit(or 4 ½ digit including symbol bit), 5digit		
Max. CLOCK		100Hz to 5kHz		
Input logic		Selectable positive(PNP) or negative(NPN)		
Input method		Static parallel, Dynamic parallel, 4/5 Bit serial, Serial(16/20/25 Bit)		
Input level		High : 5-24VDC, Low : 0-1.2VDC		
Insulation resistance		100MΩ(at 500VDC megger)		
Dielectric strength		2000VAC 50/60Hz for 1 minute		
Noise strength		±1kV the square wave noise(pulse width : 1μs)by the noise simulator		
Vibration	Mechanical	0.75mm amplitude at frequency of 10 to 55Hz(for 1 min.) in each of X, Y, Z directions for 1 hour		
	Malfunction	0.5mm amplitude at frequency of 10 to 55Hz(for 1 min.) in each of X, Y, Z directions for 10 minutes		
Shock	Mechanical	300m/s² (approx. 30G) in each of X, Y, Z directions for 3 times		
	Malfunction	100m/s² (approx. 10G) in each of X, Y, Z directions for 3 times		
Environ -ment	Ambient temperature	-10 to 50℃, storage : -25 to 65℃		
	Ambient humidity	35 to 85%RH, storage : 35 to 85%RH		
Unit weight		Approx. 75g	Approx. 165g	Approx. 267g

※The max. CLOCK is when the duty ratio is 1:1.
※Environment resistance is rated at no freezing or condensation.

■ Connections

● Static parallel input

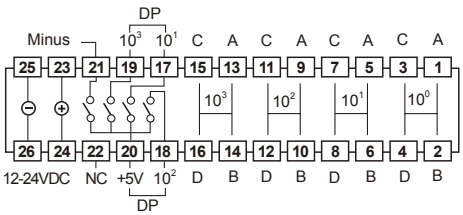

● Dynamic parallel input

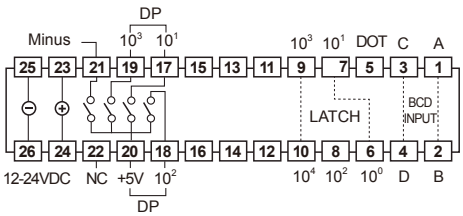

● 4/5Bit serial input

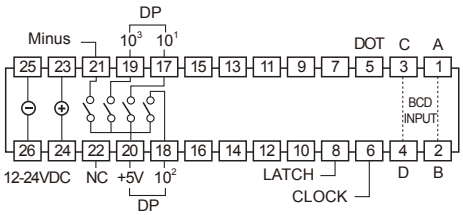

● Serial input

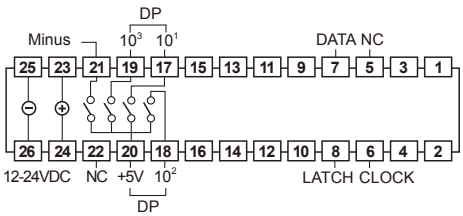

● Power terminal for AC power option of D5W series

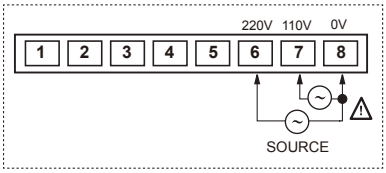

※Above terminal connection diagrams's number set by pin no.1 of hirose connector. Please note that "△" mark indicates pin no.1 of hirose connector.

※In case of Static parallel input, 5digit cannot be used because of external terminal

※To display 5 digit in Dynamic parallel, 4/5 bit serial, serial input, display range is 0 to 99999 and it cannot display minus sign. Therefore, the applied signal to the external minus sign input terminal(pin no.21) is ignored.

※Regardless of input logic, connect external DP terminal(pin no.17, 18, 19) or external minus sign input terminal(pin no.21) to +5V(pin no.20) and it displays decimal point and minus sign.