Diameter ø20mm Shaft type/Hollow shaft built-in type Incremental Rotary Encoder [E20 Series]

■ Ordering information

E20S	2	—	360	—	3	—	N	—	12	—	R

Series	Shaft type	Hollow type	Pulse/1Revolution	Output phase	Output	Power supply	Cable
Diameter ø20mm, S: Shaft type HB: Hollow shaft built-in type	External 2: ø2mm	Inner 2: ø2mm 2.5: ø2.5mm 3: ø3mm	100, 200, 320, 360	3: A, B, Z 6: A, $\overline{A}$, B, $\overline{B}$, Z, $\overline{Z}$	N: NPN open collector output V: Voltage output L: Line driver output(※)	5: 5VDC ±5% 12: 12VDC ±5%	R: Axial cable type S: Radial cable type

※Standard: E20S2-[PULSE]-3-N-12-R
E20HB2-[PULSE]-3-N-12-R

※Standard: A, B, Z

※The power of Line driver is only for 5VDC

■ Specifications

Item			Diameter ø20mm shaft/hollow shaft built-in type incremental rotary encoder	
Appearances			CE E20S Series E20HB Series	
Resolution(P/R)			100, 200, 320, 360 (Not indicated pulse and output type is customizable.)	
Electrical specification	Output phase		A, B, Z phase (line driver output A, $\overline{A}$, B, $\overline{B}$, Z, $\overline{Z}$ phase)	
	Phase difference of output		Phase difference between A and B: $\frac{T}{4} \pm \frac{T}{8}$ (T=1cycle of A phase)	
	Control output	NPN open collector output	Load current: Max. 30mA, Residual voltage: Max. 0.4VDC	
		Voltage output	Load current: Max. 10mA, Residual voltage: Max. 0.4VDC	
		Line driver output	• Low - Load current: Max. 20mA, Residual voltage: Max. 0.5VDC • High - Load current: Max. -20mA, Output voltage: Min. 2.5VDC	
	Response time (Rise/Fall)	NPN open collector output	Max. 1μs	• Measuring condition - Cable length: 1m, I sink = 20mA
		Voltage output	Max. 1μs	
		Line driver output	Max. 0.5μs	
	Max. Response frequency		100kHz	
	Power supply		• 5VDC ±5%(ripple P-P: Max. 5%) • 12VDC ±5%(ripple P-P: Max. 5%)	
	Current consumption		Max. 60mA(disconnection of the load), Line driver output: Max. 50mA(disconnection of the load)	
	Insulation resistance		Min. 100MΩ(at 500VDC megger between all terminals and case)	
	Dielectric strength		500VAC 50/60Hz for 1 minute(between all terminals and case)	
	Connection		Cable type(Axial / Radial)	
Mechanical specification	Starting torque		Max. 5gf·cm(5×10^{-4} N·m)	
	Moment of inertia		Max. 0.5g·cm²(5×10^{-8} kg·m²)	
	Shaft loading		Radial: 200gf, Thrust: 200gf	
	Max. allowable revolution ※1		6000rpm	
Vibration			1.5mm amplitude at frequency of 10 to 55Hz(for 1 min.) in each of X, Y, Z directions for 2 hours	
Shock			Approx. Max. 50G	
Environment	Ambient temperature		-10 to 70°C, storage: -20 to 80°C	
	Ambient humidity		35 to 85%RH, storage: 35 to 90%RH	
Protection			IP50(IEC standard)	
Cable			ø3mm, 5-wire(line driver output: 8-wire), Length: 1m, Shield cable	
Accessory			ø2mm Coupling(Shaft type), Bracket(Hollow shaft built-in type)	
Approval			CE (except line driver output)	
Unit weight			Approx. 35g	

※1: Make sure that. Max response revolution should be lower than or equal to max. allowable revolution when selecting the resolution.

$$[\text{Max. response revolution(rpm)} = \frac{\text{Max. response frequency}}{\text{Resolution}} \times 60\ \text{sec}]$$

※Environment resistance is rated at no freezing or condensation.

■ Connections

● NPN open collector output / Voltage output

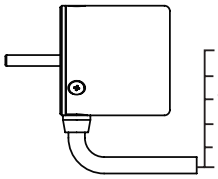

- Brown: +V(5VDC, 12VDC ±5%)
- Black: OUT A
- White: OUT B
- Orange: OUT Z
- Blue: GND(0V)
- Shield: F.G.

● Line driver output

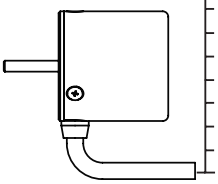

- Brown: +V(5VDC ±5%)
- Black: OUT A
- Red: OUT $\overline{A}$
- White: OUT B
- Gray: OUT $\overline{B}$
- Orange: OUT Z
- Yellow: OUT $\overline{Z}$
- Blue: GND(0V)
- Shield: F.G.

■ Dimensions

(unit: mm)

◎ Axial cable type

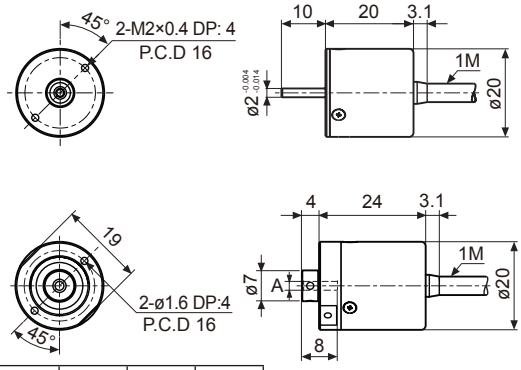

A	ø2	ø2.5	ø3
Tolerance	+0.014 +0.004		

◎ Radial cable type

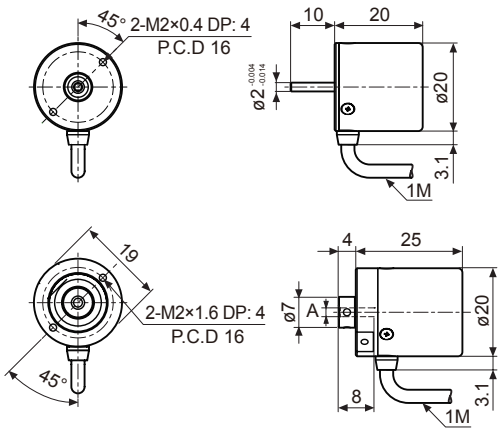

Diameter ø30mm Shaft type Incremental Rotary Encoder [E30S Series]

■ Ordering information

E30S — **4** — **3000** — **3** — **N** — **24** — ☐

Series	Shaft diameter	Pulse/1Revolution	Output phase	Output	Power supply	Cable
Diameter ø30mm, shaft type	ø4mm	Refer to resolution	3: A, B, Z 6: A, $\overline{A}$, B, $\overline{B}$, Z, $\overline{Z}$	T: Totem pole output N: NPN open collector output V: Voltage output L: Line driver output(※)	5: 5VDC ±5% 24: 12-24VDC ±5%	No mark: Cable type C: Connector cable type(※)

※Standard:E30S4-PULSE-3-N-24 ※Standard: A, B, Z ※The power of Line driver is only for 5VDC ※Cable length: 250mm

■ Connections

◎ Cable type

● Totem pole output / NPN open collector output / Voltage output

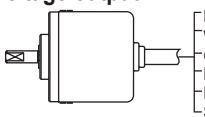

- Black: OUT A
- White: OUT B
- Orange: OUT Z
- Brown: +V(5VDC, 12-25VDC ±5%)
- Blue: GND(0V)
- Shield: F.G.

● Line driver output

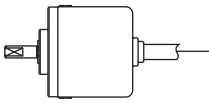

- Black: OUT A
- Red: OUT $\overline{A}$
- White: OUT B
- Gray: OUT $\overline{B}$
- Orange: OUT Z
- Yellow: OUT $\overline{Z}$
- Brown: +V(5VDC ±5%)
- Blue: GND(0V)
- Shield: F.G.

※Unused wires must be insulated.
※The metal case and shield wire of encoder should be grounded(F.G.).

◎ Connector cable type

• Totem pole output /NPN open collector output /Voltage output

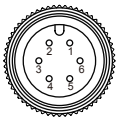

• Line driver output

Totem pole output NPN open collector output Voltage output			Line driver output		
Pin No	Function	Cable color	Pin No	Function	Cable color
①	OUT A	Black	①	OUT A	Black
②	OUT B	White	②	OUT $\overline{A}$	Red
③	OUT Z	Orange	③	+V	Brown
④	+V	Brown	④	GND	Blue
⑤	GND	Blue	⑤	OUT B	White
⑥	F.G.	Shield	⑥	OUT $\overline{B}$	Gray
—			⑦	OUT Z	Orange
			⑧	OUT $\overline{Z}$	Yellow
			⑨	F.G.	Shield

※F.G.(Field Ground):It should be grounded separately.

■ Specifications

Item			Diameter ø30mm shaft type of incremental rotary encoder	
Appearances			CE	
Resolution(P/R)			100, 200, 360, 500, 1000, 1024, 3000(Not indicated resolution is customizable.)	
Electrical specification	Output phase		A, B, Z phase(line driver: A, $\overline{A}$, B, $\overline{B}$, Z, $\overline{Z}$ phase)	
	Phase difference of output		Phase difference between A and B: $\frac{T}{4} \pm \frac{T}{8}$(T=1cycle of A phase)	
	Control output	Totem pole output	• Low - Load current: Max. 30mA, Residual voltage: Max. 0.4VDC • High - Load current: Max. 10mA, Output voltage(power voltage 5VDC): Min. (power voltage-2.0)VDC, Output voltage(power voltage 12-24VDC): Min. (power voltage-3.0)VDC	
		NPN open collector output	Load current: Max. 30mA, Residual voltage: Max. 0.4VDC	
		Voltage output	Load current: Max. 10mA, Residual voltage: Max. 0.4VDC	
		Line driver output	• Low - Load current: Max. 20mA, Residual voltage: Max. 0.5VDC • High - Load current: Max. -20mA, Output voltage: Min. 2.5VDC	
	Response time (Rise/Fall)	Totem pole output	Max. 1μs	• Measuring condition - Cable length: 2m, I sink = 20mA
		NPN open collector output	Max. 1μs	
		Voltage output	Max. 1μs(5VDC: Output resistance 820Ω), Max. 2μs(12-24VDC: Output resistance 4.7kΩ)	
		Line driver output	Max. 0.5μs	
	Max. Response frequency		300kHz	
	Power supply		• 5VDC ±5%(ripple P-P: Max. 5%) • 12-24VDC ±5%(ripple P-P: Max. 5%)	
	Current consumption		Max. 80mA(disconnection of the load), Line driver output: Max. 50mA(disconnection of the load)	
	Insulation resistance		Min. 100MΩ(at 500VDC megger between all terminals and case)	
	Dielectric strength		750VAC 50/60Hz for 1 minute(between all terminals and case)	
	Connection		Cable type, 250mm connector cable type	
Mechanical specification	Starting torque		Max. 20gf·cm(0.002N·m)	
	Moment of inertia		Max. 20g·cm²(2×10^{-6} kg·m²)	
	Shaft loading		Radial: Max. 2kgf, Thrust: Max. 1kgf	
	Max. allowable revolution※1		5000rpm	
Vibration			1.5mm amplitude at frequency of 10 to 55Hz(for 1 min.) in each of X, Y, Z directions for 2 hours	
Shock			Approx. Max. 50G	
Environment		Ambient temperature	-10 to 70℃, storage: -25 to 85℃	
		Ambient humidity	35 to 85%RH, storage: 35 to 90%RH	
Protection			IP50(IEC standard)	
Cable			ø5mm, 5-wire, Length: 2m, Shield cable(line driver :ø5mm, 8-wire)	
Accessory			ø4mm coupling	
Approval			CE (except line driver output)	
Unit weight			Approx. 80g	

※1: Make sure that. Max response revolution should be lower than or equal to max. allowable revolution when selecting the resolution.

$$[\text{Max. response revolution(rpm)} = \frac{\text{Max. response frequency}}{\text{Resolution}} \times 60 \text{ sec}]$$

※Environment resistance is rated at no freezing or condensation.

■ Dimensions

(unit: mm)

◎ Cable type

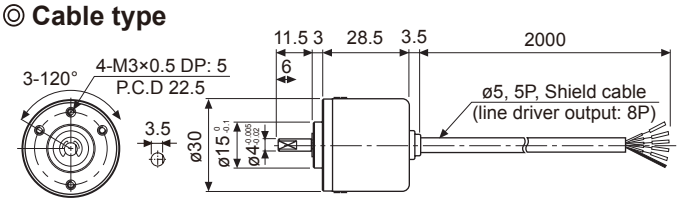

◎ Connector cable type

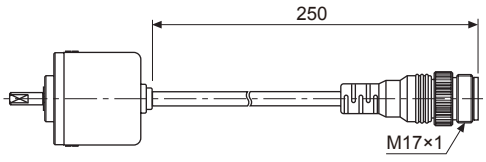

※Connector cable is customizable and refer to the 152 page for specifications.

Diameter ø40mm Shaft type/Hollow type/Built-in type Incremental Rotary Encoder [E40 Series]

■ Ordering information

E40 H	8	—	5000	—	3	—	N	—	24	—	

Series	Shaft type	Hollow type	Pulse/1Revolution	Output phase	Output	Power supply	Cable
S: Shaft type H: Hollow type HB: Hollow built-in type	External 6: ø6mm 8: ø8mm	Inner 6: ø6mm 8: ø8mm 10: ø10mm 12: ø12mm	Series	2: A, B 3: A, B, Z 4: A, $\overline{A}$, B, $\overline{B}$ 6: A, $\overline{A}$, B, $\overline{B}$, Z, $\overline{Z}$	T: Totem pole output N: NPN open collector output V: Voltage output L: Line driver output	5: 5VDC ±5% 24: 12-24VDC ±5%	No mark: Cable type C: Connector cable type(※)

※Standard: E40S6-[PULSE]-3-N-24, E40H8-[PULSE]-3-N-24 ※Standard: A, B, Z
E40HB8-[PULSE]-3-N-24

※Cable length : 250mm

■ Specifications

Item			Diameter ø40mm shaft/hollow shaft/hollow built-in type of incremental rotary encoder
Appearances			E40S Series E40H Series E40HB Series
Resolution(P/R)※1			*1, *2 ,*5, 10, *12, 15, 20, 23, 25, 30, 35, 40, 45, 50, 60, 75, 100, 120, 150, 192, 200, 240, 250, 256, 300, 360, 400, 500, 512, 600, 800, 1000, 1024, 1200, 1500, 1800, 2000, 2048, 2500, 3000, 3600, 5000 (Not indicated resolution is customizable.)
Electrical specification	Output phase		A, B, Z phase(line driver A, $\overline{A}$, B, $\overline{B}$, Z, $\overline{Z}$ phase)
	Phase difference of output		Phase difference between A and B: $\frac{T}{4} \pm \frac{T}{8}$ (T=1cycle of A phase)
	Control output	Totem pole output	• Low - Load current:Max. 30mA, Residual voltage: Max. 0.4VDC • High - Load current:Max. 10mA, Output voltage(power voltage 5VDC): Min. (power voltage-2.0)VDC, Output voltage(power voltage 12-24VDC):Min. (power voltage-3.0)VDC
		NPN open collector output	Load current: Max. 30mA, Residual voltage: Max. 0.4VDC
		Voltage output	Load current: Max. 10mA, Residual voltage: Max. 0.4VDC
		Line driver output	• Low - Load current: Max. 20mA, Residual voltage: Max. 0.5VDC • High - Load current: -20mA, Output voltage(power voltage 5VDC): Min. 2.5VDC, Output voltage(power voltage 12-24VDC): Min. (power voltage-3.0)VDC
	Response time (Rise/Fall)	Totem pole output	Max. 1μs; • Measuring condition - Cable length: 2m, I sink = 20mA
		NPN open collector output	
		Voltage output	
		Line driver output	Max. 0.5μs
	Max. Response frequency		300kHz
	Power supply		• 5VDC ±5%(ripple P-P: Max. 5%) • 12-24VDC ±5%(ripple P-P: Max. 5%)
	Current consumption		Max. 80mA(disconnection of the load), Line driver output: Max. 50mA(disconnection of the load)
	Insulation resistance		Min. 100MΩ(at 500VDC megger between all terminals and case)
	Dielectric strength		750VAC 50/60Hz for 1 minute(between all terminals and case)
	Connection		Cable type, 250mm connector cable type
Mechanical specification	Starting torque		Shaft type: Max. 40gf·cm(0.004N·m), Hole type: Max. 50gf·cm(0.005N·m)
	Moment of inertia		Max. 40g·cm²(4×10^{-6} kg·m²)
	Shaft loading		Radial: Max. 2kgf, Thrust: Max. 1kgf
	Max. allowable revolution ※2		5000rpm
Vibration			1.5mm amplitude at frequency of 10 to 55Hz(for 1 min.) in each of X, Y, Z directions for 2 hours
Shock			Approx. Max. 50G
Environment	Ambient temperature		-10 to 70℃, storage: -25 to 85℃
	Ambient humidity		35 to 85%RH, storage: 35 to 90%RH
Protection			IP50(IEC standard) ※Option type is available for IP64 (IEC standard).
Cable			ø5mm, 5-wire, Length: 2m, Shield cable(line driver output: ø5mm, 8-wire) (AWG24, Core diameter: 0.08, Number of cores: 40, Insulator out diameter: ø1mm)
Accessory			• Shaft type :ø6mm coupling standard, ø8mm coupling(Sold separately) • Hole type: Bracket
Approval			CE (except line driver output)
Unit weight			Approx. 160g

※1: '*' pulse is only for A, B phase(Line Driver output is for A, $\overline{A}$, B, $\overline{B}$ phase)
※2: Make sure that. Max response revolution should be lower than or equal to max. allowable revolution when selecting the resolution.

$$[\text{Max. response revolution(rpm)}= \frac{\text{Max. response frequency}}{\text{Resolution}} \times 60\text{ sec}]$$

※Environment resistance is rated at no freezing or condensation.

■ Connections

◎ Cable type

● **Totem pole output / NPN open collector output / Voltage output**

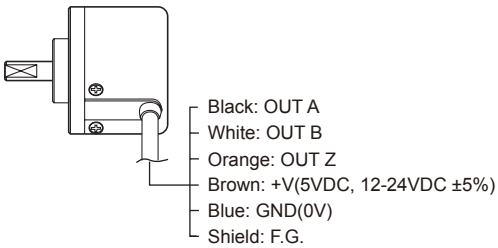

※Unused wires must be insulated.
※The metal case and shield wire of encoder should be grounded(F.G.).

● **Line driver output**

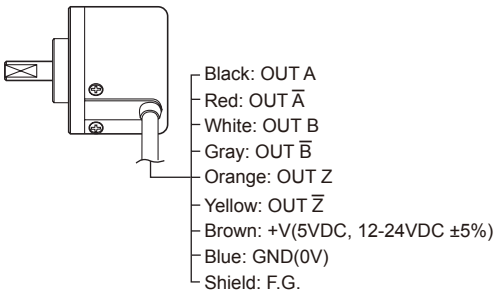

◎ Connector cable type

● **Totem pole output / NPN open collector output / Voltage output**

• **Line driver output**

Totem pole output/ NPN open collector output/ Voltage output			Line driver output		
Pin No	Function	Cable color	Pin No	Function	Cable color
①	OUT A	Black	①	OUT A	Black
②	OUT B	White	②	OUT $\overline{A}$	Red
③	OUT Z	Orange	③	+V	Brown
④	+V	Brown	④	GND	Blue
⑤	GND	Blue	⑤	OUT B	White
⑥	F.G.	Shield	⑥	OUT $\overline{B}$	Gray
—			⑦	OUT Z	Orange
			⑧	OUT $\overline{Z}$	Yellow
			⑨	F.G.	Shield

※F.G.(Field Ground): It should be grounded separately.

■ Dimensions

(unit: mm)

◎ Cable type

● **Shaft type**

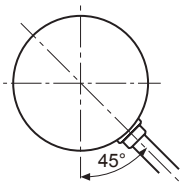

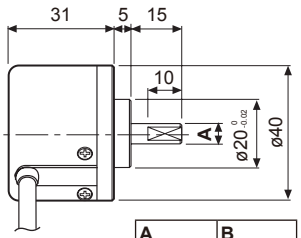

A	B
ø6 -0.01 -0.015	5
ø8 -0.01 -0.02	7

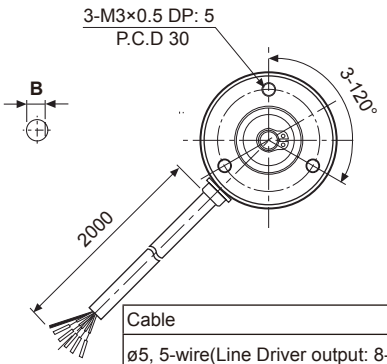

Cable
ø5, 5-wire(Line Driver output: 8-wire), Length:2000, Shield cable

■ Dimensions

(unit: mm)

◎ Cable type

● Hollow shaft / Hollow shaft built-in type

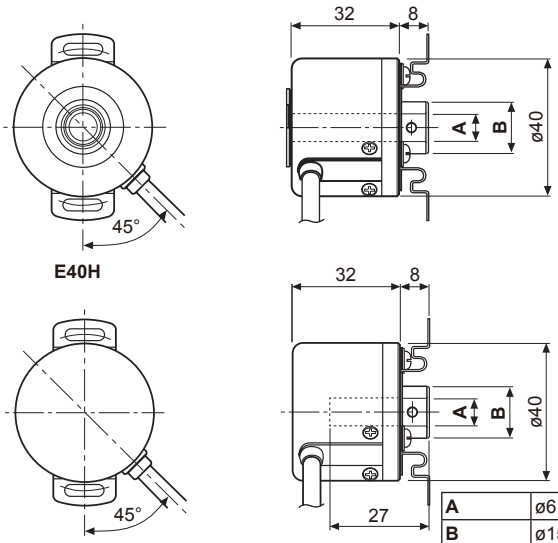

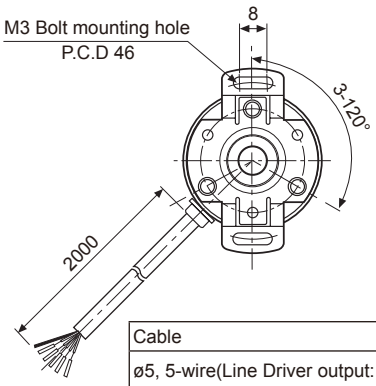

Cable
ø5, 5-wire(Line Driver output: 8-wire), Length: 2000, Shield cable

A	ø6	ø8	ø10	ø12
B	ø15		ø17	
Tolerance	$^{+0.015}_{0}$			

◎ Connector cable type

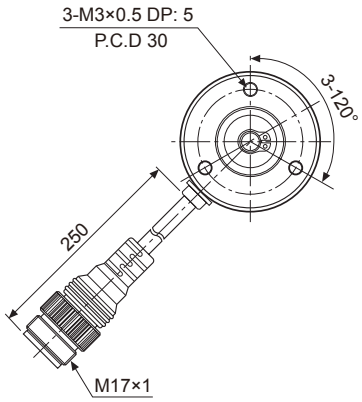

※Connector cable is customizable and refer to the 152 page for specifications.

Diameterø40mm Hollow shaft built-in type Incremental Rotary Encoder [E40HBP Series]

■ Ordering information

E40HB	8	P	–	600	–	3	–	N	–	24	–	

Series	Shaft diameter	External material	Pulse/1Revolution	Output phase	Control output	Power supply	Cable
Diameter ø40mm HB: Hollow shaft built-in type	ø8mm	Plastic	Refer to resolution	2: A, B 3: A, B, Z 4: A, $\overline{A}$, B, $\overline{B}$ 6: A, $\overline{A}$, B, $\overline{B}$, Z, $\overline{Z}$	T: Totem pole output N: NPN open collector output V: Voltage output L: Line driver output(※)	5: 5VDC ±5% 24: 12-24VDC ±5%	No mark: Cable type C: Connector cable type(※)

※Standard: E40HB68P-PULSE-3-N-24 ※Standard: A, B, Z ※The power of Line driver is only for 5VDC ※Cable length : 250mm

■ Specifications

Item			Diameter ø40mm hollow shaft built-in type of incremental rotary encoder	
Appearances				
Resolution(P/R) ※1			*1, *2 ,*5, 10, *12, 15, 20, 23, 25, 30, 35, 40, 45, 50, 60, 75, 100, 120, 125, 150, 192, 200, 240, 250, 256, 300, 360, 400, 500, 512, 600	
Electrical specification	Output phase		A, B, Z phase(line driver: A, $\overline{A}$, B, $\overline{B}$, Z, $\overline{Z}$ phase)	
	Phase difference of output		Phase difference between A and B: $\frac{T}{4} \pm \frac{T}{8}$ (T=1cycle of A phase)	
	Control output	Totem pole output	• Low - Load current: Max. 30mA, Residual voltage: Max. 0.4VDC • High - Load current: Max. 10mA, Output voltage(power voltage 5VDC):Min. (power voltage -2.0)VDC, Output voltage(power voltage 12-24VDC): Min. (power voltage-3.0)VDC	
		NPN open collector output	Load current: Max. 30mA, Residual voltage: Max. 0.4VDC	
		Voltage output	Load current: Max. 10mA, Residual voltage: Max. 0.4VDC	
		Line driver output	• Low - Load current: Max. 20mA, Residual voltage: Max. 0.5VDC • High - Load current: Max. -20mA, Output voltage(power voltage 5VDC): Min. 2.5VDC, Output voltage(power voltage 12-24VDC): Min. (power voltage-3.0)VDC	
	Response time (Rise/Fall)	Totem pole output	Max. 1μs	• Measuring condition - Cable length: 2m, I sink = 20mA
		NPN open collector output		
		Voltage output		
		Line driver output	Max. 0.5μs	
	Max. Response frequency		180kHz	
	Power supply		• 5VDC ±5%(ripple P-P: Max. 5%) • 12-24VDC ±5%(ripple P-P: Max. 5%)	
	Current consumption		Max. 80mA(disconnection of the load)	
	Insulation resistance		Min. 100MΩ(at 500VDC megger between all terminals and case)	
	Dielectric strength		750VAC 50/60Hz for 1 minute(between all terminals and case)	
	Connection		Cable type, 250mm connector cable type	
Mechanical specification	Starting torque		Max. 50gf·cm(0.005N·m)	
	Moment of inertia		Max. 40g·cm²(4×10^{-6} kg·m²)	
	Shaft loading		Radial: Max. 3kgf, Thrust: Max. 0.5kgf	
	Max. allowable revolution ※2		3000rpm	
Vibration			1.5mm amplitude at frequency of 10 to 55Hz(for 1 min.) in each of X, Y, Z directions for 2 hours	
Shock			Approx. Max. 50G	
Environment	Ambient temperature		-10 to 70℃, storage: -25 to 85℃	
	Ambient humidity		35 to 85%RH, storage: 35 to 90%RH	
Protection			IP50(IEC standard)	
Cable			ø5mm, 5-wire, Length: 2m, Shield cable(line driver output: ø5mm, 8-wire) (AWG24, Core diameter: 0.08, Number of cores: 40, Insulator out diameter: ø1mm)	
Accessory			Bracket	
Unit weight			Approx. 130g	

※1: '*' pulse is only for A, B phase(Line Driver output is for A, $\overline{A}$, B, $\overline{B}$ phase)
※2: Make sure that. Max response revolution should be lower than or equal to max. allowable revolution when selecting the resolution.

[Max. response revolution(rpm)= $\frac{\text{Max. response frequency}}{\text{Resolution}}$ × 60 sec] ※Environment resistance is rated at no freezing or condensation.

■ Connections

◎ Cable type

● Totem pole output / NPN open collector output / Voltage output

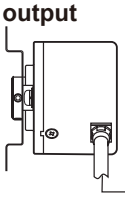

- Black: OUT A
- White: OUT B
- Orange: OUT Z
- Brown: +V(5VDC, 12-24VDC ±5%)
- Blue: GND(0V)
- Shield: F.G.

※Unused wires must be insulated.

● Line driver output

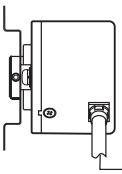

- Black: OUT A
- Red: OUT $\overline{A}$
- White: OUT B
- Gray: OUT $\overline{B}$
- Orange: OUT Z
- Yellow: OUT $\overline{Z}$
- Brown: +V(5VDC ±5%)
- Blue: GND(0V)
- Shield: F.G.

◎ Connector cable type

● Totem pole output / NPN open collector output / Voltage output

● Line driver output

Totem pole output/ NPN open collector output/ Voltage output			Line driver output		
Pin No	Function	Cable color	Pin No	Function	Cable color
①	OUT A	Black	①	OUT A	Black
②	OUT B	White	②	OUT $\overline{A}$	Red
③	OUT Z	Orange	③	+V	Brown
④	+V	Brown	④	GND	Blue
⑤	GND	Blue	⑤	OUT B	White
⑥	F.G.	Shield	⑥	OUT $\overline{B}$	Gray
—			⑦	OUT Z	Orange
			⑧	OUT $\overline{Z}$	Yellow
			⑨	F.G.	Shield

※F.G.(Field Ground): It should be grounded separately .

■ Dimensions

(unit: mm)

◎ Cable type

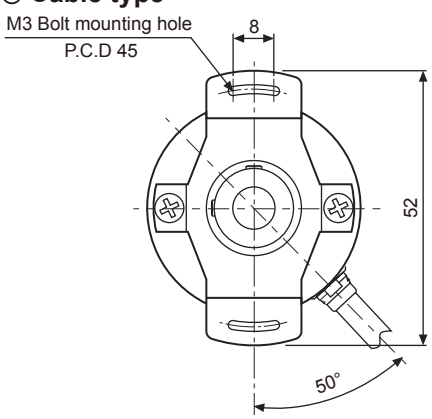

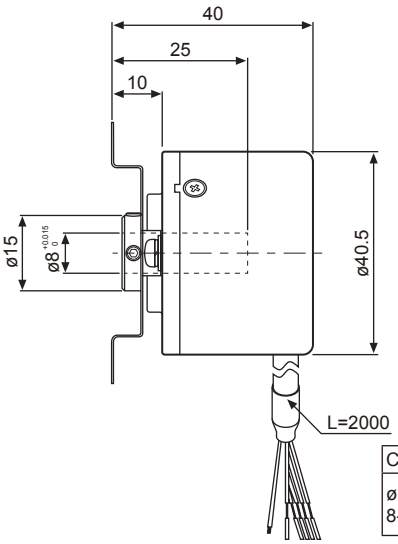

Cable
ø5, 5-wire(Line Driver output: 8-wire), Length:2000, Shield cable

◎ Connector cable type

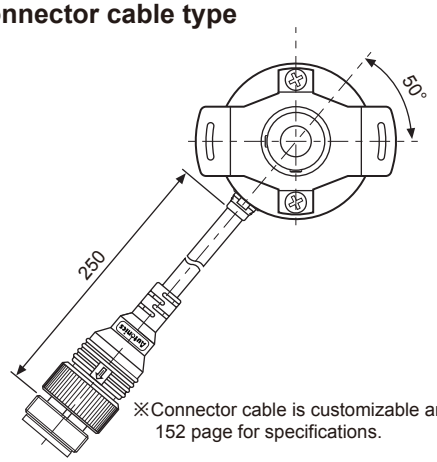

※Connector cable is customizable and refer to the 152 page for specifications.

Diameter ø50mm Shaft type Incremental Rotary Encoder [E50S Series]

■ Ordering information (Former name: ENB)

E50S	8	—	8000	—	3	—	N	—	24	—	

Series	Shaft diameter	Pulse/1Revolution	Output phase	Output	Power supply	Cable
Diameter ø50mm, shaft type	ø8mm	Refer to resolution	2: A, B 3: A, B, Z 4: A, $\overline{A}$, B, $\overline{B}$ 6: A, $\overline{A}$, B, $\overline{B}$, Z, $\overline{Z}$	T: Totem pole output N: NPN open collector output V: Voltage output L: Line driver output	5 :5VDC ±5% 24:12-24VDC ±5%	No mark: Cable type C: Connector cable type(※) CR: Axial connector type CS: Radial connector type

※Standard: E50S8-PULSE-3-N-24 ※Cable length: 250mm

■ Specifications

Item			Diameter ø50mm shaft type of incremental rotary encoder
Appearances			Line-up CE
Resolution(P/R)※1			*1, *2 ,*5, 10, 12, 15, 20, 23, 25, 30, 35, 40, 45, 50, 60, 75, 100, 120, 125, 150, 192, 200, 240, 250, 256, 300, 360, 400, 500, 512, 600, 800, 1000, 1024, 1200, 1500, 1800, 2000, 2048, 2500, 3000, 3600, 5000, 6000, 8000
Electrical specification	Output phase		A, B, Z phase(line driver: A, $\overline{A}$, B, $\overline{B}$, Z, $\overline{Z}$ phase)
	Phase difference of output		Phase difference between A and B: $\frac{T}{4} \pm \frac{T}{8}$ (T=1cycle of A phase)
	Control output	Totem pole output	• Low - Load current:Max. 30mA, Residual voltage: Max. 0.4VDC • High - Load current: Max. 10mA, Output voltage(power voltage 5VDC): Min. (power voltage-2.0)VDC, Output voltage(power voltage 12-24VDC):Min. (power voltage-3.0)VDC
		NPN open collector output	Load current: Max. 30mA, Residual voltage: Max. 0.4VDC
		Voltage output	Load current: Max. 10mA, Residual voltage: Max. 0.4VDC
		Line driver output	• Low - Load current: Max. 20mA, Residual: Max. 0.5VDC • High - Load current: Max. -20mA, Output voltage(power voltage 5VDC): Min. 2.5VDC, Output voltage(power voltage 12-24VDC): Min. (power voltage-3.0)VDC
	Response time (Rise/Fall)	Totem pole output	Max. 1μs; • Measuring condition - Cable length: 2m, I sink = 20mA
		NPN open collector output	
		Voltage output	
		Line driver output	Max. 0.5μs
	Max. Response frequency		300kHz
	Power supply		• 5VDC ±5%(ripple P-P: Max. 5%) • 12-24VDC ±5%(ripple P-P: Max. 5%)
	Current consumption		Max. 80mA(disconnection of the load), Line driver output: Max. 50mA(disconnection of the load)
	Insulation resistance		Min. 100MΩ(at 500VDC megger between all terminals and case)
	Dielectric strength		750VAC 50/60Hz for 1 minute(between all terminals and case)
	Connection		Cable type, 250mm connector cable type, Connector type(Axial, Radial)
Mechanical specification	Starting torque		Max. 70gf·cm(0.007N·m)※2 / Max. 800gf·cm(0.08N·m)※3
	Moment of inertia		Max. 80g·cm²(8×10^{-6} kg·m²)※2 / Max. 400g·cm²(4×10^{-5} kg·m²)※3
	Shaft loading		Radial: 10kgf, Thrust: 2.5kgf
	Max. allowable revolution※4		5000rpm
Vibration			1.5mm amplitude at frequency of 10 to 55Hz(for 1 min.) in each of X, Y, Z directions for 2 hours
Shock			Approx. Max. 75G
Environment	Ambient temperature		-10 to 70℃, storage: -25 to 85℃
	Ambient humidity		35 to 85%RH, storage: 35 to 90%RH
Protection			Cable type, Connector cable type: IP50(IEC standard)※5, Connector type: IP65(IEC standard)
Cable			ø5mm, 5-wire, Length: 2m, Shield cable(line driver output: ø5mm, 8-wire) (AWG 24, Core diameter: 0.08mm, Number of cores: 40, Insulator out diameter: ø1mm)
Accessory			ø8mm coupling, bracket
Approval			Cable type CE (except for line driver output)
Unit weight			Approx. 275g, Connector type: 180g

※1: '*' pulse is only for A, B phase(line driver output is for A, $\overline{A}$, B, $\overline{B}$ phase). ※2: This value is for Cable type, Connector cable type(protection: IP50).
※3: This value is for Cable type, Connector cable type(protection: IP64)/Connector type (protection: IP65)
※4: Make sure that max. response revolution should be lower than or equal to max. allowable revolution when selecting the resolution.

【Max. response resolution(rpm) = $\frac{\text{Max. response frequency}}{\text{Resolution}} \times 60$ sec】

※5: 'Cable type, Connector cable type is option as IP64 protection.
※Environment resistance is rated at no freezing or condensation.

■ Connections

◎ Cable type

• Totem pole output / NPN open collector output / Voltage output

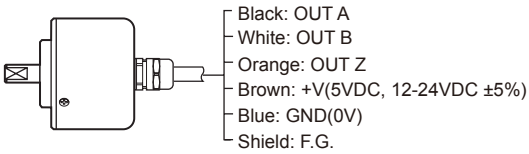

• Line driver output

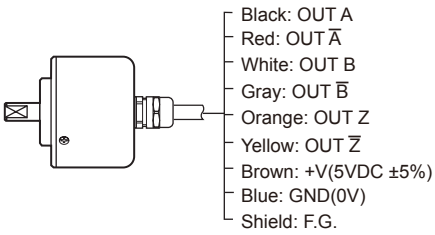

※Unused wires must be insulated.
※The shield cable and metal case of encoder must be grounded(F.G.)

◎ Cable connector type / Connector type

• Totem pole output / NPN open collector output / Voltage output

• Line driver output

Totem pole output/ NPN open collector output/ Voltage output			Line driver output		
Pin No	Function	Cable color	Pin No	Function	Cable color
①	OUT A	Black	①	OUT A	Black
②	OUT B	White	②	OUT $\overline{A}$	Red
③	OUT Z	Orange	③	+V	Brown
④	+V	Brown	④	GND	Blue
⑤	GND	Blue	⑤	OUT B	White
⑥	F.G.	Shield	⑥	OUT $\overline{B}$	Gray
—			⑦	OUT Z	Orange
			⑧	OUT $\overline{Z}$	Yellow
			⑨	F.G.	Shield

※F.G.(Field Ground): It must be grounded separately.

■ Dimensions

(unit: mm)

◎ Cable type, Connector cable type(protection: IP50)

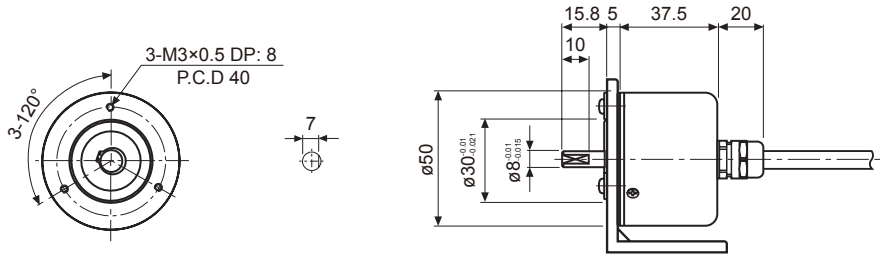

◎ Cable type, Connector cable type(protection: IP64)

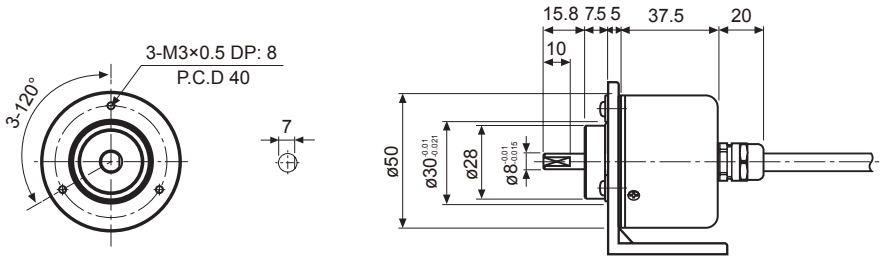

Cable for Cable type	Cable for Connector cable type
ø5, 5-wire(line driver output: 8-wire),Length: 2000mm, Shield cable	ø5, 5-wire(line driver output: 8-wire),Length: 250mm, Shield cable

※Connector cable is sold separately and refer to the 152 page for specifications.

◎ Axial / Radial connector type(protection: IP65)

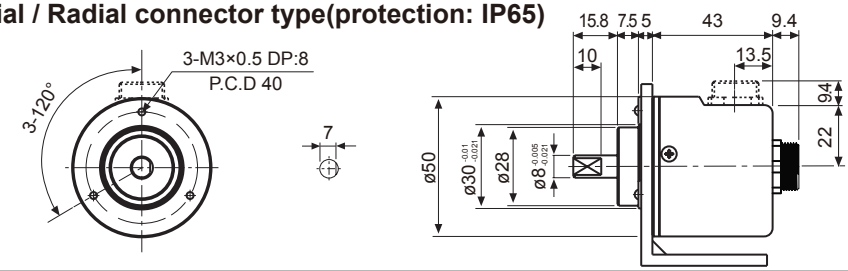

Diameter ø50mm Shaft type Incremental Rotary Encoder [E50SP Series]

■ Ordering information

E50S	8	P	—	600	—	3	—	N	—	24	—	

Series	Shaft diameter	External material	Pulse/1Revolution	Output phase	Output	Power supply	Cable
Diameter ø50mm, shaft type	6: ø6mm 8: ø8mm	Plastic	Refer to resolution	2: A, B 3: A, B, Z 4: A, $\overline{A}$, B, $\overline{B}$ 6: A, $\overline{A}$, B, $\overline{B}$, Z, $\overline{Z}$	T: Totem pole output N: NPN open collector output V: Voltage output L: Line driver output(※)	5: 5VDC ±5% 24: 12-24VDC ±5%	No mark: Cable type C: Connector cable type(※)

※Standard: E50S8P-PULSE-3-N-24

※The power of Line driver is only for 5VDC

※Cable length : 250mm

■ Specifications

Item			Diameter ø50mm shaft type of incremental rotary encoder	
Appearances				
Resolution(P/R)※1			*1, *2 ,*5, 10, 12, 15, 20, 23, 25, 30, 35, 40, 45, 50, 60, 75, 100, 120, 125, 150, 192, 200, 240, 250, 256, 300, 360, 400, 500, 512, 600	
Electrical specification	Output phase		A, B, Z phase(line driver: A, $\overline{A}$, B, $\overline{B}$, Z, $\overline{Z}$ phase)	
	Phase difference of output		Phase difference between A and B: $\frac{T}{4} \pm \frac{T}{8}$ (T=1cycle of A phase)	
	Control output	Totem pole output	• Low - Load current: Max. 30mA, Residual voltage: Max. 0.4VDC • High - Load current: Max. 10mA, Output voltage(power voltage 5VDC):Min. (power voltage-2.0)VDC, Output voltage(power voltage 12-24VDC):Min. (power voltage-3.0)VDC	
		NPN open collector output	Load current: Max. 30mA, Residual voltage: Max. 0.4VDC	
		Voltage output	Load current: Max. 10mA, Residual voltage: Max. 0.4VDC	
		Line driver output	• Low - Load current: Max. 20mA, Residual voltage: Max. 0.5VDC • High - Load current: Max. -20mA, Output voltage: Min. 2.5VDC	
	Response time (Rise/Fall)	Totem pole output	Max. 1μs	• Measuring condition - Cable length: 2m, I sink = 20mA
		NPN open collector output		
		Voltage output		
		Line driver output	Max. 0.5μs	
	Max. Response frequency		180kHz	
	Power supply		• 5VDC ±5%(ripple P-P: Max. 5%) • 12-24VDC ±5%(ripple P-P: Max. 5%)	
	Current consumption		Max. 80mA(disconnection of the load), Line driver output: Max. 50mA(disconnection of the load)	
	Insulation resistance		Min. 100MΩ(at 500VDC megger between all terminals and case)	
	Dielectric strength		750VAC 50/60Hz for 1 minute(between all terminals and case)	
	Connection		Cable type, 250mm connector cable type, Connector type(Axial, Radial)	
Mechanical specification	Starting torque		Max. 100gf·cm(0.01N·m)	
	Moment of inertia		Max. 40g·cm²(4×10^{-6} kg·m²)	
	Shaft loading		Radial: 2kgf, Thrust: 1kgf	
	Max. allowable revolution※2		5000rpm	
Vibration			1.5mm amplitude at frequency of 10 to 55Hz(for 1 min.) in each of X, Y, Z directions for 2 hours	
Shock			Approx. Max. 75G	
Environment		Ambient temperature	-10 to 70℃, storage: -25 to 85℃	
		Ambient humidity	35 to 85%RH, storage: 35 to 90%RH	
Protection			IP50(IEC standard)	
Cable			ø5mm, 5-wire, Length: 2m, Shield cable(line driver output: ø5mm, 8-wire) (AWG 24, Core diameter: 0.08mm, Number of cores: 40, Insulator out diameter: ø1mm)	
Accessory			ø8(ø6)mm coupling, Bracket	
Unit weight			Approx. 235g	

※1: '*' pulse is only for A, B phase(Line Driver output is for A, $\overline{A}$, B, $\overline{B}$ phase)

※2: Make sure that. Max response revolution should be lower than or equal to max. allowable revolution when selecting the resolution.

$$[\text{Max. response revolution(rpm)} = \frac{\text{Max. response frequency}}{\text{Resolution}} \times 60 \text{ sec}]$$

※Environment resistance is rated at no freezing or condensation.

■ Connections

◎ Cable type

- **Totem pole output / NPN open collector output / Voltage output**

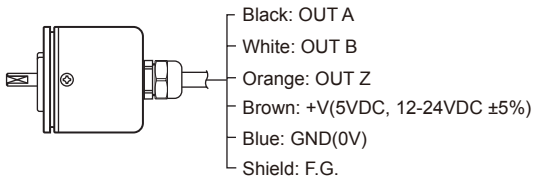

- **Line driver output**

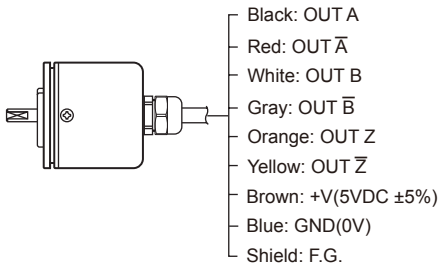

※Unused wires must be insulated.
※The shield cable and metal case of encoder must be grounded(F.G.).

◎ Connector cable type

- **Totem pole output / NPN open collector output / Voltage output**
- **Line driver output**

Totem pole output NPN open collector output Voltage output			Line driver output		
Pin No	Function	Cable color	Pin No	Function	Cable color
①	OUT A	Black	①	OUT A	Black
②	OUT B	White	②	OUT $\overline{A}$	Red
③	OUT Z	Orange	③	+V	Brown
④	+V	Brown	④	GND	Blue
⑤	GND	Blue	⑤	OUT B	White
⑥	F.G.	Shield	⑥	OUT $\overline{B}$	Gray
—			⑦	OUT Z	Orange
			⑧	OUT $\overline{Z}$	Yellow
			⑨	F.G.	Shield

※F.G.(Field Ground): It must be grounded separately.

■ Dimensions

(unit: mm)

◎ Cable type

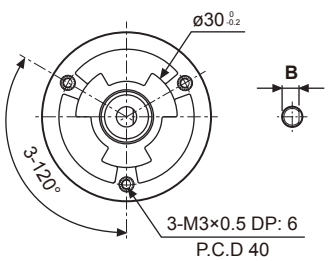

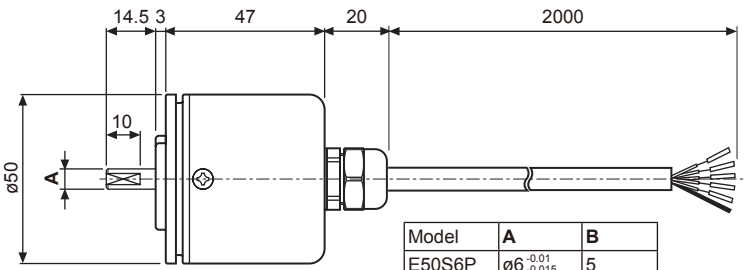

Model	A	B
E50S6P	ø6 -0.01 -0.015	5
E50S8P	ø8 -0.01 -0.02	7

- **Connect the bracket**

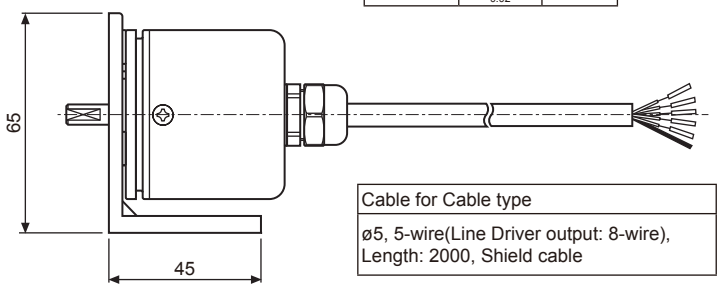

Cable for Cable type
ø5, 5-wire(Line Driver output: 8-wire), Length: 2000, Shield cable

◎ Connector cable type

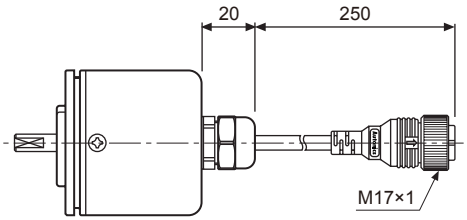

Cable for Connector cable type
ø5, 5-wire(Line Driver output: 8-wire), Length: 250mm, Shield cable

※Connector cable is sold separately and refer to the 152 page for specifications.

Diameter ø58mm Shaft type/Hollow type/Built-in type Incremental Rotary Encoder [E58 Series]

■ Ordering information

E58SC	10	–	8000	–	3	N	–	24	–	

Series Diameter ø58mm	Shaft diameter			Pulse/ 1Revolution	Output phase	Output	Power supply	Cable
SC: Shaft Clamping	External	10	ø10mm	Refer to resolution	2: A, B 3: A, B, Z(Standard) 4: A, $\overline{A}$, B, $\overline{B}$ 6: A, $\overline{A}$, B, $\overline{B}$, Z, $\overline{Z}$	T: Totem pole output N: NPN open collector output V: Voltage output L: Line driver output	5: 5VDC ±5% 24: 12-24VDC ±5%	No mark: Cable type C: Connector cable type (Cable length: 250mm) CR: Axial connector type CS: Radial connector type
SS: Shaft Synchro		6	ø6mm					
H: Hollow	Inner	12	ø12mm					
HB: Hollow Built-in								

※Standard: E58SC10-PULSE-3-N-24-CR

※Customizable model specifications are available.

※Standard cable for shaft/built-in encoder is axial cable type. Standard cable for hollow shaft encoder is radial cable type.

■ Specifications

Item			Diameter ø58mm incremental rotary encoder	
Appearances				
Resolution(P/R)※1			*1, *2, *5, 10, *12, 15, 20, 23, 25, 30, 35, 40, 45, 50, 60, 75, 100, 120, 125, 150, 192, 200, 240, 250, 256, 300, 360, 400, 500, 512, 600, 800, 1000, 1024, 1200, 1500, 1800, 2000, 2048, 2500, 3000, 3600, 5000, 6000, 8000	
Electrical specification	Output phase		A, B, Z phase(line driver output: A, $\overline{A}$, B, $\overline{B}$, Z, $\overline{Z}$ phase)	
	Phase difference of output		Phase difference between A and B: $\frac{T}{4} \pm \frac{T}{8}$ (T=1cycle of A phase)	
	Control output	Totem pole output	• Low - Load current: Max. 30mA, Residual voltage: Max. 0.4VDC • High - Load current: Max. 10mA, Output voltage(power voltage 5VDC): Min. (power voltage-2.0)VDC, Output voltage(power voltage 12-24VDC): Min. (power voltage-3.0)VDC	
		NPN open collector output	Load current: Max. 30mA, Residual voltage: Max. 0.4VDC	
		Voltage output	Load current: Max. 10mA, Residual voltage: Max. 0.4VDC	
		Line driver output	• Low - Load current: Max. 20mA, Residual voltage: Max. 0.5VDC • High - Load current: Max. -20mA, Output voltage(power voltage 5VDC): Min. (power voltage-2.5)VDC, Output voltage(power voltage 12-24VDC): Min. (power voltage-3.0)VDC	
	Response time (Rise/ Fall)	Totem pole output	Max. 1μs	• Measuring condition - Cable length: 2m, I sink = 20mA
		NPN open collector output		
		Voltage output		
		Line driver output	Max. 0.5μs	
	Max. Response frequency		300kHz	
	Power supply		• 5VDC ±5%(ripple P-P: Max. 5%) • 2-24VDC ±5%(ripple P-P: Max. 5%)	
	Current consumption		Max. 80mA(disconnection of the load), Line driver output: Max. 50mA(disconnection of the load)	
	Insulation resistance		Min. 100MΩ(at 500VDC mega for all terminals and case)	
	Dielectric strength		750VAC 50/60Hz for 1 minute(all terminals and case)	
	Connection		Cable type, 250mm connector cable type, Connector type(Axial, Radial)	
Mechanical specification	Starting torque		• SC/SS type: Max. 40gf·cm(0.004N·m) • HB/H type: Max. 90gf·cm(0.009N·m)	
	Moment of inertia		• SC/SS type: Max. 15g·cm²(1.5×10^{-6} kg·m²) • HB/H type: Max. 20g·cm²(2×10^{-6} kg·m²)	
	Shaft loading		• SC/SS type - Radia: Max. 10kg·f, Thrust: Max. 2.5kg·f • HB/H type - Radial: Max. 2kg·f, Thrust: Max. 1kg·f	
	Max. allowable revolution※2		5000rpm	
Vibration			1.5mm amplitude at frequency of 10 to 55Hz(for 1 min.) in each of X, Y, Z directions for 2 hours	
Shock			Approx. Max. 75G	
Environment	Ambient temperature		-10 to 70°C, storage: -25 to 85°C	
	Ambient humidity		35 to 85%RH, storage: 35 to 90%RH	
Protection			IP50(IEC standard)	
Cable			ø5mm, 5-wire, Length: 2m, Shield cable(line driver output: ø5mm, 8-wire) (AWG24, Core diameter: 0.08mm, Number of cores: 40, Insulator out diameter: ø1mm)	
Accessory			ø10mm(SC type) / ø6mm(SS type) coupling, Fixing bracket	
Approval			CE (except Line driver output)	
Unit weight			• SC-CS/CR type: Approx. 230g, SS-CS/CR type: Approx. 205g, HB-CS/CR type: Approx. 200g • SC type: Approx. 310g, SS type: Approx. 285g, HB type: Approx. 270g, H type: Approx. 270g	

※1: 1, 2, 5 12 P/R output A and B phase only.(But Line driver output: A, $\overline{A}$, B, $\overline{B}$ phase) [In case of hollow shaft type, 6000, 8000 P/R excluded]

※2: Make sure that. Max response revolution should be lower than or equal to max. allowable revolution when selecting the resolution.

$$[\text{Max. response revolution(rpm)}= \frac{\text{Max. response frequency}}{\text{Resolution}} \times 60\ \text{sec}]$$

※Environment resistance is rated at no freezing or condensation.

■ Connections

◎ Cable type

● Totem pole output / NPN open collector output / Voltage output

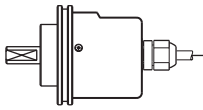

- Black: OUT A
- White: OUT B
- Orange: OUT Z
- Brown: +V(5VDC, 12-24VDC ±5%)
- Blue: GND(0V)
- Shield: F.G.

※Unused wires must be insulated.
※The metal and shield cable of encoder should be grounded(F.G.)

● Line driver output

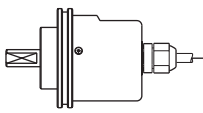

- Black: OUT A
- Red: OUT $\overline{A}$
- White: OUT B
- Gray: OUT $\overline{B}$
- Orange: OUT Z
- Yellow: OUT $\overline{Z}$
- Brown: +V(5VDC, 12-24VDC ±5%)
- Blue: GND(0V)
- Shield: F.G.

◎ Connector cable type / Connector type

● Totem pole output / NPN open collector output / Voltage output

● Line driver output

Totem pole output/ NPN open collector output/ Voltage output			Line driver output		
Pin No	Function	Cable color	Pin No	Function	Cable color
①	OUT A	Black	①	OUT A	Black
②	OUT B	White	②	OUT $\overline{A}$	Red
③	OUT Z	Orange	③	+V	Brown
④	+V	Brown	④	GND	Blue
⑤	GND	Blue	⑤	OUT B	White
⑥	F.G.	Shield	⑥	OUT $\overline{B}$	Gray
—			⑦	OUT Z	Orange
			⑧	OUT $\overline{Z}$	Yellow
			⑨	F.G.	Shield

※F.G.(Field Ground): It should be grounded separately.

■ Dimensions

(unit: mm)

◎ Shaft clamping type

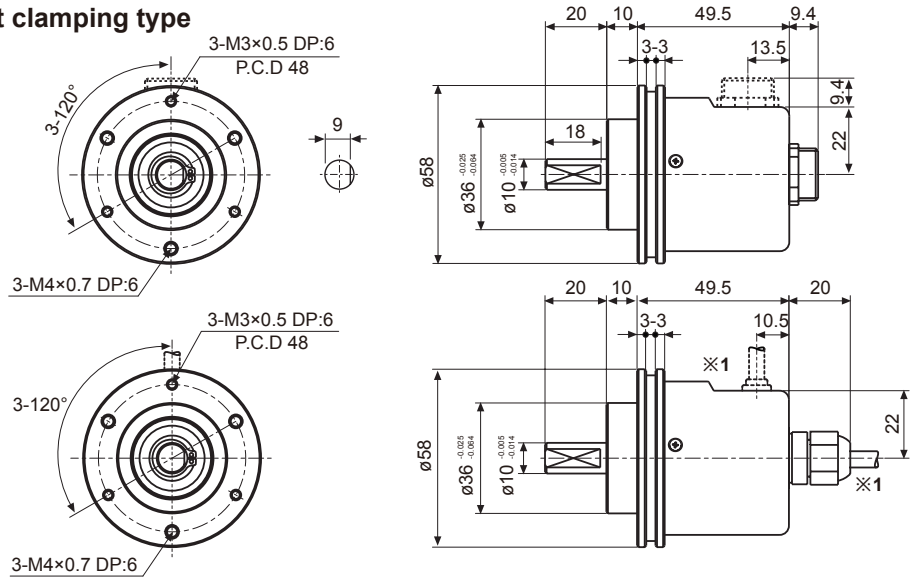

◎ Shaft synchro type

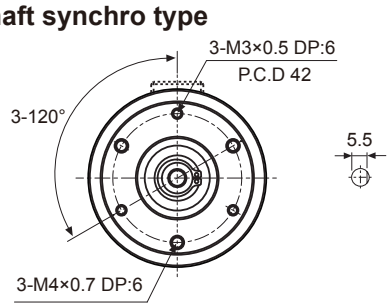

※1:	Cable for cable type
	ø5, 5-wire(line driver output: 8-wire), Length: 2000, Shield cable

◎ Shaft synchro type

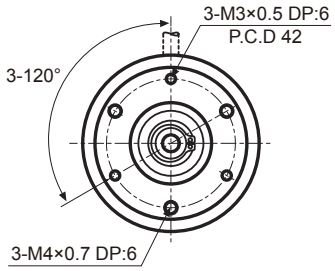

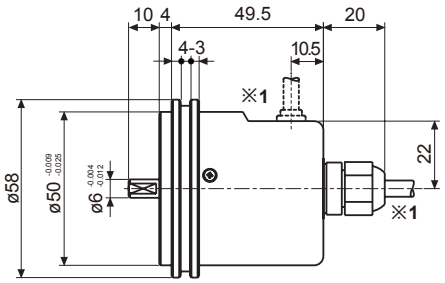

● **Cable connector type**

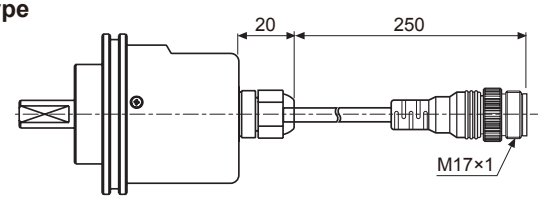

※Connector cable is customizable and refer to the 152 page for specifications.

◎ Hollow type

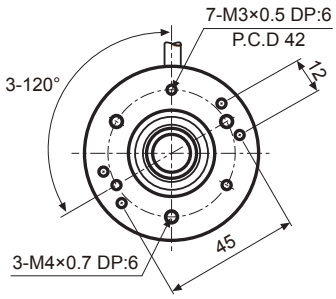

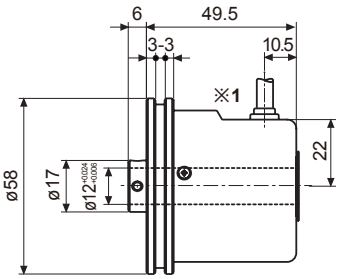

◎ Hollow built-in type

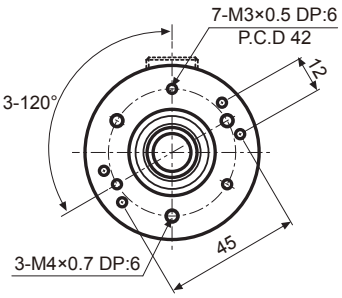

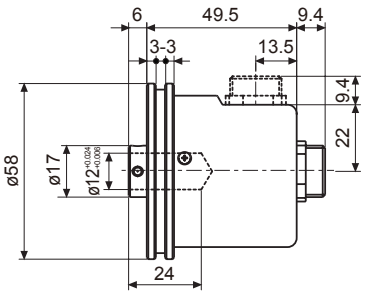

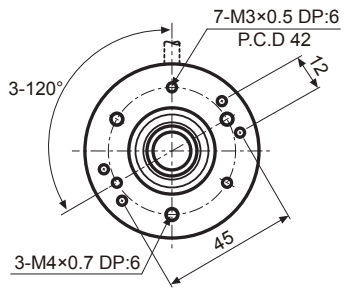

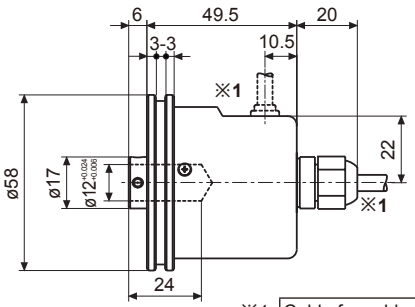

※1:	Cable for cable type
	ø5, 5-wire(line driver output: 8-wire), Length: 2000, Shield cable

Diameter ø60mm Hollow shaft type Incremental Rotary Encoder [E60H Series]

■ Ordering information

E60H	20	-	8192	-	3	-	N	-	24	-	

Series	Shaft diameter	Pulse/1Revolution	Output phase	Output	Power supply	Cable
Diameter ø60mm, hollow shaft type	ø20mm	100, 1024, 500, 8192	3: A, B, Z 6: A, $\overline{A}$, B, $\overline{B}$, Z, $\overline{Z}$	T: Totem pole output N: NPN open collector output V: Voltage output L: Line driver output(※)	5: 5VDC ±5% 24: 12-24VDC ±5%	No mark: Cable type C: Connector cable type(※)

※Standard: E60H20-PULSE-3-N-24

※Cable length : 250mm

■ Specifications

Item			Diameter ø60mm hollow shaft type of incremental rotary encoder
Appearances			
Resolution(P/R)※1			100, 1024, 5000, 8192
Electrical specification	Output phase		A, B, Z phase (line driver output A, $\overline{A}$, B, $\overline{B}$, Z, $\overline{Z}$ phase)
	Phase difference of output		Phase difference between A and B: $\frac{T}{4} \pm \frac{T}{8}$ (T=1cycle of A phase)
	Control output	Totem pole output	• Low - Load current:Max. 30mA, Residual voltage: Max. 0.4VDC • High - Load current:Max. 10mA, Output voltage(power voltage 5VDC):Min. (power voltage-2.0)VDC, Output voltage(power voltage 12-24VDC):Min. (power voltage-3.0)VDC
		NPN open collector output	Load current: Max. 30mA, Residual voltage: Max. 0.4VDC
		Voltage output	Load current: Max. 10mA, Residual voltage: Max. 0.4VDC
		Line driver output	• Low - Load current: Max. 20mA, Residual voltage: Max. 0.5VDC • High - Load current: Max. -20mA, Output voltage(power voltage 5VDC):Min. (power voltage-2.0)VDC, Output voltage(power voltage 12-24VDC):Min. (power voltage-3.0)VDC
	Response time (Rise/Fall)	Totem pole output	Max. 1μs; • Measuring condition - Cable length: 2m, I sink = 20mA
		NPN open collector output	
		Voltage output	
		Line driver output	Max. 0.5μs
	Max. Response frequency		300kHz
	Power supply		• 5VDC ±5%(ripple P-P:Max. 5%) • 12-24VDC ±5%(ripple P-P:Max. 5%)
	Current consumption		Max. 80mA(disconnection of the load), Line driver output: Max. 50mA(disconnection of the load)
	Insulation resistance		Min. 100MΩ(at 500VDC megger between all terminals and case)
	Dielectric strength		750VAC 50/60Hz for 1 minute(between all terminals and case)
	Connection		Cable type, 250mm connector cable type
Mechanical specification	Starting torque		Max. 150gf·cm(0.015N·m)
	Moment of inertia		Max. 110g·cm²(11×10^{-6} kg·m²)
	Shaft loading		Radial: 5kgf, Thrust: 2.5kgf
	Max. allowable revolution※2		6000rpm
Vibration			1.5mm amplitude at frequency of 10 to 55Hz(for 1 min.) in each of X, Y, Z directions for 2 hours
Shock			Approx. Max. 100G
Environment	Ambient temperature		-10 to 70℃, storage: -25 to 85℃
	Ambient humidity		35 to 85%RH, storage: 35 to 90%RH
Protection			IP50(IEC standard)
Cable			ø5mm, 5-wire, Length: 2m, Shield cable(line driver output: ø5mm, 8-wire) (AWG24, Core diameter: 0.08mm, Number of cores: 40, Insulator out diameter: ø1mm)
Accessory			Bracket 2EA
Unit weight			Approx. 300g

※1: Not indicated type is customizable.
※2: Make sure that. Max response revolution should be lower than or equal to max. allowable revolution when selecting the resolution.

$$[\text{Max. response revolution(rpm)}= \frac{\text{Max. response frequency}}{\text{Resolution}} \times 60\ \text{sec}]$$

※Environment resistance is rated at no freezing or condensation.

■ Connections

◎ Cable type

● **Totem pole output / NPN open collector output / Voltage output**

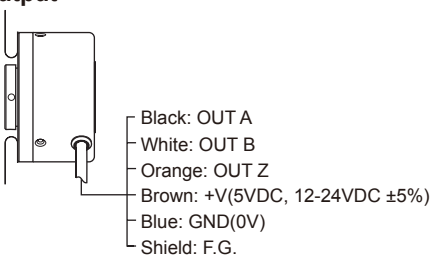

※Unused wires must be insulated.
※The metal case and shield cable of encoder should be grounded(F.G.).

● **Line driver output**

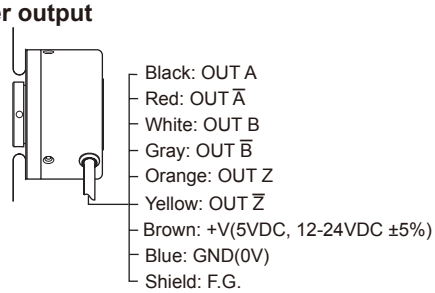

◎ Connector cable type

● **Totem pole output / NPN open collector output / Voltage output**

● **Line driver output**

Totem pole output/ NPN open collector output/ Voltage output			Line driver output		
Pin No	Function	Cable color	Pin No	Function	Cable color
①	OUT A	Black	①	OUT A	Black
②	OUT B	White	②	OUT $\overline{A}$	Red
③	OUT Z	Orange	③	+V	Brown
④	+V	Brown	④	GND	Blue
⑤	GND	Blue	⑤	OUT B	White
⑥	F.G.	Shield	⑥	OUT $\overline{B}$	Gray
—			⑦	OUT Z	Orange
			⑧	OUT $\overline{Z}$	Yellow
			⑨	F.G.	Shield

※F.G.(Field Ground): It should be grounded separately.

■ Dimension

(unit: mm)

◎ Cable type

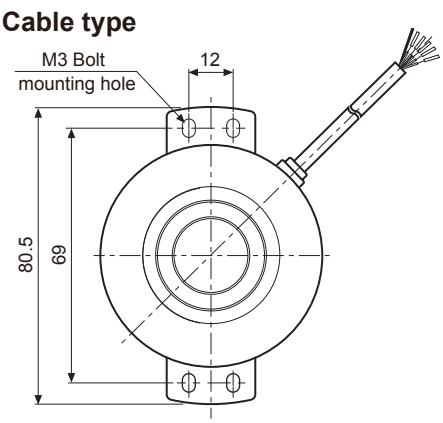

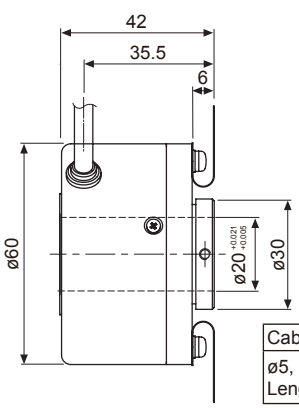

Cable
ø5, 5-wire(line driver output: 8-wire), Length: 2000m, Shield cable

◎ Connector cable type

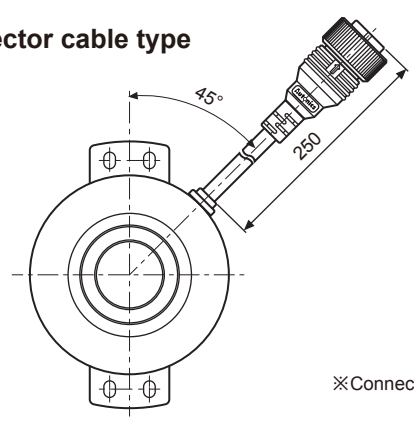

※Connector cable is customizable and refer to the 152 page for specifications.

Diameter ø68mm Shaft type Incremental Rotary Encoder [E68S Series]

■ Ordering information

E68S	15	–	1024	–	6	–	L	–	5

Series	Shaft diameter	Pulse/1Revolution	Output phase	Output	Power supply
Diameter ø68mm, shaft type	ø15mm	500, 600, 1024	6: A, $\overline{A}$, B, $\overline{B}$, Z, $\overline{Z}$	L: Line driver output	5VDC ±5%

■ Specifications

Item		Diameter ø68mm shaft type of incremental rotary encoder
Appearances		
Resolution(P/R)※1		500, 600, 1024
Electrical specification	Output phase	A, $\overline{A}$, B, $\overline{B}$, Z, $\overline{Z}$ pahse
	Phase difference of output	Phase difference between A and B: $\frac{T}{4} \pm \frac{T}{8}$ (T=1cycle of A phase)
	Control output	• Low - Load current: Max. 20mA, Residual voltage: Max. 0.5VDC • High - Load current: Max. -20mA, Output voltage: Min. 2.5VDC
	Response time(Rise/Fall)	Max. 0.5μs(Cable: 1m, I sink = 20mA)
	Power supply	5VDC ± 5%(ripple P-P: Max. 5%)
	Max. Response frequency	180kHz
	Current consumption	Max. 50mA(disconnection of the load)
	Insulation resistance	Min. 100MΩ(at 500VDC megger) (between all terminals and case)
	Dielectric strength	750VAC 50/60Hz for 1 minute(between all terminals and case)
	Connection	Connector type(MS3102A20-29P)
Mechanical specification	Starting torque	1.5kgf·cm(Max. 0.15N·m)
	Shaft loading	Radial: 20kgf, Thrust: 10kgf
	Max. allowable revolution※2	6500rpm
Vibration		1.5mm amplitude at frequency of 10 to 55Hz(for 1 min.) in each of X, Y, Z directions for 2 hours
Shock		Approx. Max. 50G
Environ-ment	Ambient temperature	-10 to 70℃, storage: -25 to 85℃
	Ambient humidity	35 to 85%RH, storage: 35 to 90%RH
Protection		IP65(IEC standard)
Unit weight		Approx. 550g

※1: The number of pulse, output type not indicated in the resolution is available to order.
※2: Make sure that. Max response revolution should be lower than or equal to max. allowable revolution when selecting the resolution.

$$[\text{Max. response revolution(rpm)} = \frac{\text{Max. response frequency}}{\text{Resolution}} \times 60 \text{ sec}]$$

※Environment resistance is rated at no freezing or condensation.

■ Connections

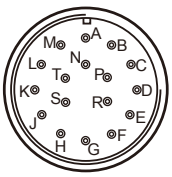

Pin No.	Connection	Pin No.	Connection
A	A phase	K	0V
B	Z phase	L	N·C
C	B phase	M	0V
D	N·C	N	$\overline{A}$ phase
E	5VDC	P	$\overline{Z}$ phase
F	N·C	R	$\overline{B}$ phase
G	N·C	S	N·C
H	5VDC	T	Shield(F.G.)
J	N·C	—	—

※N·C: Not Connected.
※E and H terminals, K and M terminals are connected internally.

■ Dimensions

(unit: mm)

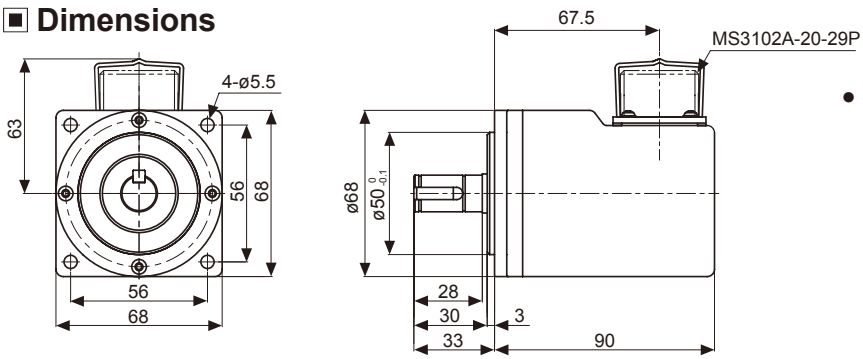

● **Shaft dimension**

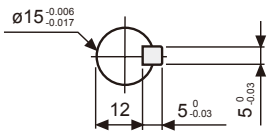

Diameter ø80mm Hollow shaft type Incremental Rotary Encoder [E80H Series]

■ Ordering information

E80H	30	–	3200	–	3	–	N	–	24	–	

Series	Shaft diameter	Pulse/1Revolution	Output phase	Output	Power supply	Cable
Diameter ø80mm, hollow shaft type	ø30mm ø32mm	60, 100, 360, 500, 512, 1024, 3200	3: A, B, Z 6: A, $\overline{A}$, B, $\overline{B}$, Z, $\overline{Z}$	T: Totem pole output N: NPN open collector output V: Voltage output L: Line driver output(※)	5: 5VDC ±5% 24: 12-24VDC ±5%	No mark: Cable type C: Connector cable type(※)

※Shaft inner diameter ø32mm is customizable
※The power of Line driver is only for 5VDC
※Cable length : 250mm

■ Connections

◎ Cable type

● **Totem pole output / NPN open collector output / Voltage output**

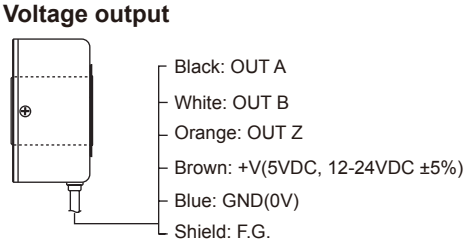

● **Line driver output**

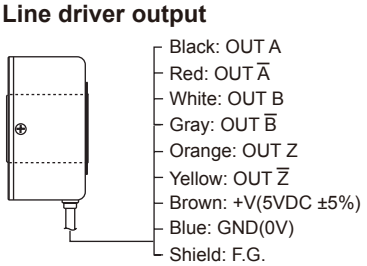

※Unused wires must be insulated.
※The metal case and shield cable should be grounded(F.G.).

◎ Connector cable type

- **Totem pole output / NPN open collector output / Voltage output**

- **Line driver output**

Totem pole output NPN open collector output Voltage output			Line driver output		
Pin No	Function	Cable color	Pin No	Function	Cable color
①	OUT A	Black	①	OUT A	Black
②	OUT B	White	②	OUT $\overline{A}$	Red
③	OUT Z	Orange	③	+V	Brown
④	+V	Brown	④	GND	Blue
⑤	GND	Blue	⑤	OUT B	White
⑥	F.G.	Shield	⑥	OUT $\overline{B}$	Gray
—			⑦	OUT Z	Orange
			⑧	OUT $\overline{Z}$	Yellow
			⑨	F.G.	Shield

※F.G.(Field Ground): It should be grounded separately.

■ Specifications

Item			Diameter ø80mm hollow shaft type of incremental rotary encoder	
Appearances			CE	
Resolution(P/R)※1			60, 100, 360, 500, 512, 1024, 3200	
Electrical specification	Output phase		A, B, Z phase (line driver output A, $\overline{A}$, B, $\overline{B}$, Z, $\overline{Z}$ phase)	
	Phase difference of output		Phase difference between A and B: $\frac{T}{4} \pm \frac{T}{8}$ (T=1cycle of A phase)	
	Control output	Totem pole output	• Low - Load current:Max. 30mA, Residual voltage: Max. 0.4VDC • High - Load current:Max. 10mA, Output voltage(power voltage 5VDC):Min. (power voltage-2.0)VDC, Output voltage(power voltage 12-24VDC):Min. (power voltage-3.0)VDC	
		NPN open collector output	Load current: Max. 30mA, Residual voltage: Max. 0.4VDC	
		Voltage output	Load current: Max. 10mA, Residual voltage: Max. 0.4VDC	
		Line driver output	• Low - Load current: Max. 20mA, Residual voltage: Max. 0.5VDC • High - Load current: Max. -20mA, Output voltage: Min. 2.5VDC	
	Response time (Rise/Fall)	Totem pole output	Max. 1μs	• Measuring condition - Cable length: 2m, I sink = 20mA
		NPN open collector output		
		Voltage output		
		Line driver output	Max. 0.5μs	
	Max. Response frequency		200kHz	
	Power supply		• 5VDC ±5%(ripple P-P:Max. 5%) • 12-24VDC ±5%(ripple P-P:Max. 5%)	
	Current consumption		Max. 80mA(disconnection of the load), Line driver output: Max. 50mA(disconnection of the load)	
	Insulation resistance		Min. 100MΩ(at 500VDC megger between all terminals and case)	
	Dielectric strength		750VAC 50/60Hz for 1 minute(between all terminals and case)	
	Connection		Cable type, 250mm connector cable type	
Mechanical specification	Starting torque		Max. 200gf·cm(0.02N·m)	
	Moment of inertia		Max. 800g·cm²(8×10^{-5} kg·m²)	
	Shaft loading		Radial: 5kgf, Thrust: 2.5kgf	
	Max. allowable revolution ※2		3600rpm	
Vibration			1.5mm amplitude at frequency of 10 to 55Hz(for 1 min.) in each of X, Y, Z directions for 2 hours	
Shock			Approx. Max. 75G	
Environment	Ambient temperature		-10 to 70℃, storage: -25 to 85℃	
	Ambient humidity		35 to 85%RH, storage: 35 to 90%RH	
Protection			IP50(IEC standard)	
Cable			ø5mm, 5-wire, Length: 2m, Shield cable(line driver output: ø5mm, 8-wire) (AWG24, Core diameter: 0.08mm, Number of cores: 40, Insulator out diameter: ø1mm)	
Accessory			Spring bracket	
Approval			CE (except for line driver output)	
Unit weight			Approx. 560g	

※1: Not indicated type is customizable.
※2: Make sure that. Max response revolution should be lower than or equal to max. allowable revolution when selecting the resolution.

$$[\text{Max. response revolution(rpm)} = \frac{\text{Max. response frequency}}{\text{Resolution}} \times 60 \text{ sec}]$$

※Environment resistance is rated at no freezing or condensation.

▣ Dimensions

(unit: mm)

◎ Cable type

● **Shaft inner diameter standard**

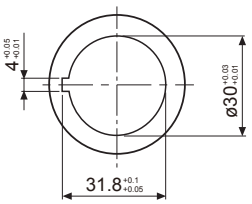

● **Shaft inner diameter(Option)**

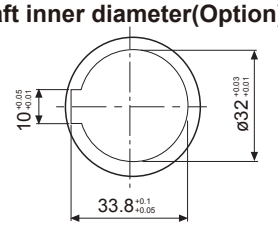

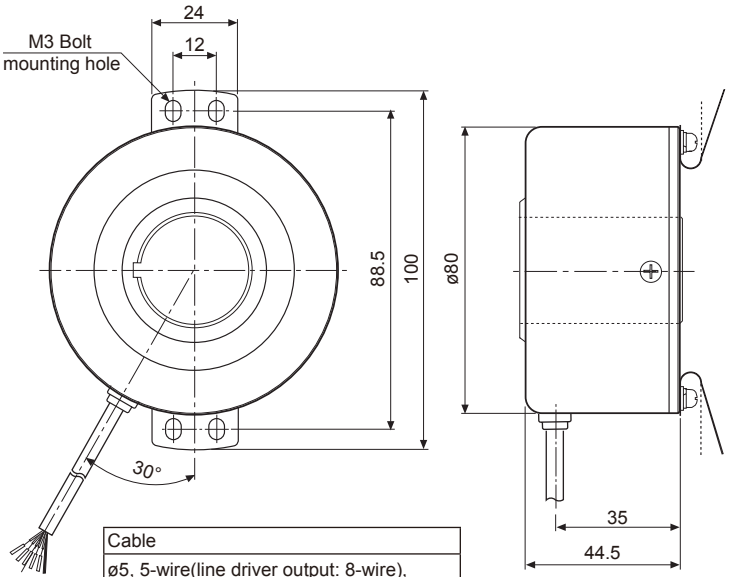

Cable
ø5, 5-wire(line driver output: 8-wire), Length: 2000m, Shield cable

◎ Connector cable type

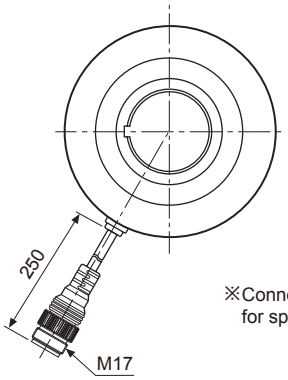

※Connector cable is sold separate and refer to the 152 page for specifications.

Diameter ø100mm Hollow shaft type Incremental Rotary Encoder [E100H Series]

■ Ordering information

E100H — 35 — 10000 — 6 — L — 5

Series	Shaft diameter	Pulse/1Revolution	Output phase	Output	Power supply
Diameter ø100mm hollow shaft type	ø35mm	512, 1024, 10000	3: A, B, Z 6: A, $\overline{A}$, B, $\overline{B}$, Z, $\overline{Z}$	T: Totem pole output N: NPN open collector output V: Voltage output L: Line driver output(※)	5: 5VDC ±5% 24: 12-24VDC ±5%

■ Specifications

Item			Diameter ø100mm hollow shaft type of incremental rotary encoder	
Appearances			CE	
Resolution(P/R)※1			512, 1024, 10000	
Electrical specification	Output phase		A, B, Z phase (line driver output A, $\overline{A}$, B, $\overline{B}$, Z, $\overline{Z}$ phase)	
	Phase difference of output		Phase difference between A and B: $\frac{T}{4} \pm \frac{T}{8}$ (T=1cycle of A phase)	
	Control output	Totem pole output	• Low - Load current:Max. 30mA, Residual voltage: Max. 0.4VDC • High - Load current:Max. 10mA, Output voltage(power voltage 5VDC):Min. (power voltage-2.0)VDC, Output voltage(power voltage 12-24VDC):Min. (power voltage-3.0)VDC	
		NPN open collector output	Load current: Max. 30mA, Residual voltage: Max. 0.4VDC	
		Voltage output	Load current: Max. 10mA, Residual voltage: Max. 0.4VDC	
		Line driver output	• Low - Load current: Max. 20mA, Residual voltage: Max. 0.5VDC • High - Load current: Max. -20mA, Output voltage(power voltage 5VDC):Min. (power voltage-2.0) VDC, Output voltage(power voltage 12-24VDC):Min. (power voltage-3.0)VDC	
	Response time (Rise/Fall)	Totem pole output	Max. 1μs	• Measuring condition - Cable length: 2m, I sink = 20mA
		NPN open collector output		
		Voltage output		
		Line driver output	Max. 0.5μs	
	Max. Response frequency		300kHz	
	Power supply		• 5VDC ±5%(ripple P-P: Max. 5%) • 12-24VDC ±5%(ripple P-P: Max. 5%)	
	Current consumption		Max. 80mA(disconnection of the load), Line driver output: Max. 50mA(disconnection of the load)	
	Insulation resistance		Min. 100MΩ(at 500VDC megger between all terminals and case)	
	Dielectric strength		750VAC 50/60Hz for 1 minute(between all terminals and case)	
	Connection		Connector type	
Mechanical specification	Starting torque		Max. 300gf·cm(0.03N·m)	
	Moment of inertia		Max. 800g·cm²(8×10^{-5} kg·m²)	
	Shaft loading		Radial: 5kgf, Thrust: 2.5kgf	
	Max. allowable revolution※2		3600rpm	
Vibration			1.5mm amplitude at frequency of 10 to 55Hz(for 1 min.) in each of X, Y, Z directions for 2 hours	
Shock			Approx. Max. 75G	
Environment	Ambient temperature		-10 to 70℃, storage: -25 to 85℃	
	Ambient humidity		35 to 85%RH, storage: 35 to 90%RH	
Protection			IP50(IEC standard)	
Cable			ø5mm, 5-wire, Length: 2m, Shield cable(line driver output: ø5mm, 8-wire) (AWG24, Core diameter: 0.08mm, Number of cores: 40, Insulator out diameter: ø1mm)	
Accessory			Spring bracket 2EA	
Approval			CE (except for line driver output)	
Unit weight			Approx. 1200g	

※1: Not indicated type is customizable.
※2: Make sure that. Max response revolution should be lower than or equal to max. allowable revolution when selecting the resolution.

$$[\text{Max. response revolution(rpm)} = \frac{\text{Max. response frequency}}{\text{Resolution}} \times 60 \text{ sec}]$$

※Environment resistance is rated at no freezing or condensation.

■ Connections

● **Totem pole output / NPN open collector output / Voltage output**

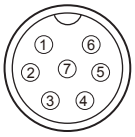

SCN-19-7P

Pin No.	Function	Cable color
①	+V	Brown
②	GND	Blue
③	OUT A	Black
④	OUT B	White
⑤	OUT Z	Orange
⑥	F.G.	Shield
⑦	N·C	N.C

※Unused wires must be insulated.
※The metal case and shield cable should be grounded(F.G.).

● **Line driver output**

SCN-20-10P

Pin No.	Function	Cable color
①	+V	Brown
②	GND	Blue
③	OUT A	Black
④	OUT $\overline{A}$	Red
⑤	F.G.	Shield
⑥	OUT B	White
⑦	OUT $\overline{B}$	Gray
⑧	OUT Z	Orange
⑨	OUT $\overline{Z}$	Yellow
⑩	N·C	N·C

※N·C(Not Connected)

■ Dimensions

(unit: mm)

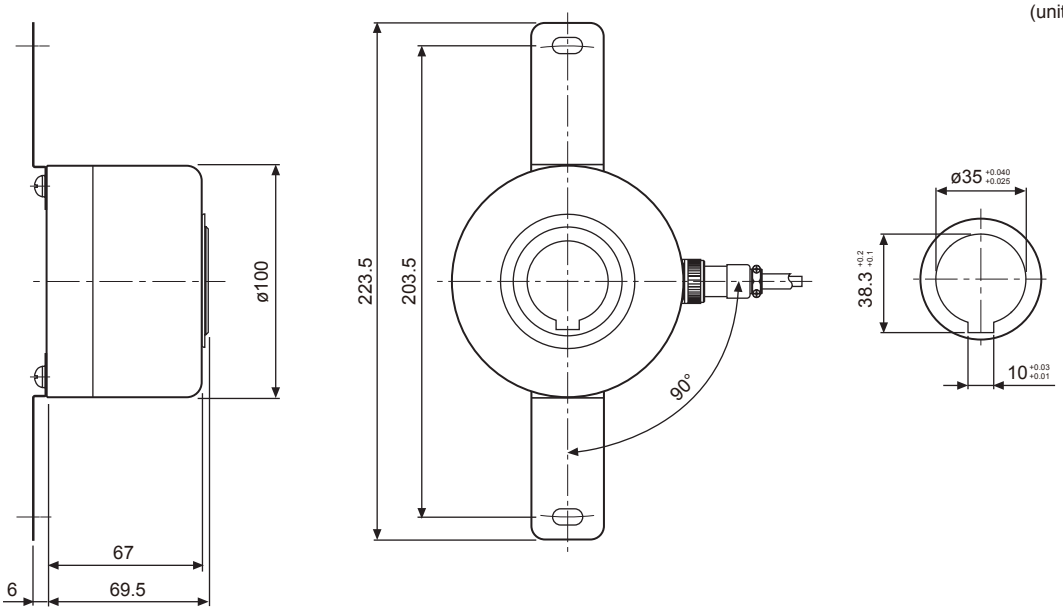

◎ Connector cable

● **Totem pole output / NPN open collector output / Voltage output**

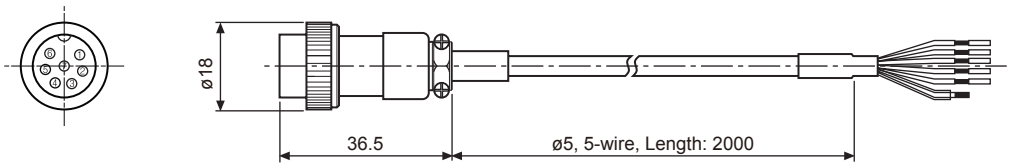

● **Line driver output**

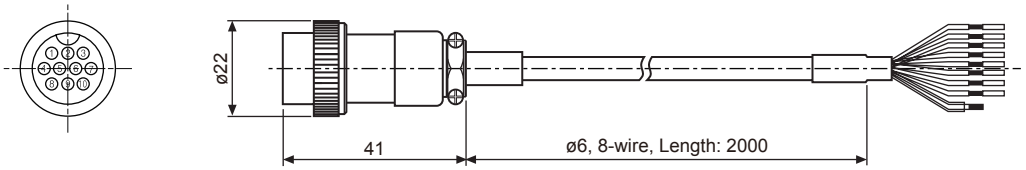

※10m connector cable is customizable.
※Cable type is customizable.

Side-mounting Shaft type Incremental Rotary Encoder [ENA Series]

■ Ordering information

ENA	—	5000	—	2	—	N	—	24

Series	Pulse/1Revolution	Output phase	Output	Power supply
Side-mounting shaft type (External diameter of shaft :ø10mm)	Refer to resolution	2: A, B 3: A, B, Z	T: Totem pole output N: NPN open collector output V: Voltage output	5: 5VDC ±5% 24: 12-24VDC ±5%

※Standard: ENA-[ ]-2-N-24

■ Specifications

Item			Side-mounting shaft type of incremental rotary encoder	
Appearances			CE	
Resolution(P/R)※1			*1, *2, *5, 10, 12, 15, 20, 23, 25, 30, 35, 40, 45, 50, 60, 75, 100, 120, 150, 192, 200, 240, 250, 256, 300, 360, 400, 500, 512, 600, 800, 1000, 1024, 1200,1500, 1800, 2000, 2048, 2500. 3000, 3600, 5000	
Electrical specification	Output phase		A, B phase(Option: A, B, Z phase)	
	Phase difference of output		Phase difference between A and B: $\frac{T}{4} \pm \frac{T}{8}$ (T=1cycle of A phase)	
	Control output	Totem pole output	• Low - Load current:Max. 30mA, Residual voltage: Max. 0.4VDC • High - Load current:Max. 10mA, Output voltage(power voltage 5VDC):Min. (power voltage-2.0)VDC, Output voltage(power voltage 12-24VDC):Min. (power voltage-3.0)VDC	
		NPN open collector output	Load current: Max. 30mA, Residual voltage: Max. 0.4VDC	
		Voltage output	Load current: Max. 10mA, Residual voltage: Max. 0.4VDC	
	Response time (Rise/Fall)	Totem pole output	Max. 1μs	• Measuring condition - Cable length: 2m, I sink = 20mA
		NPN open collector output		
		Voltage output		
	Max. Response frequency		300kHz	
	Power supply		• 5VDC ±5%(ripple P-P: Max. 5%) • 12-24VDC ±5%(ripple P-P: Max. 5%)	
	Current consumption		Max. 80mA(disconnection of the load)	
	Insulation resistance		Min. 100MΩ(at 500VDC megger between all terminals and case)	
	Dielectric strength		750VAC 50/60Hz for 1 minute(between all terminals and case)	
	Connection		Connector type	
Mechanical specification	Starting torque		Max. 70gf·cm(0.007N·m)	
	Moment of inertia		Max. 80g·cm²(8×10^{-6} kg·m²)	
	Shaft loading		Radial: 10kgf, Thrust: 2.5kgf	
	Max. allowable revolution※2		5000rpm	
Vibration			1.5mm amplitude at frequency of 10 to 55Hz(for 1 min.) in each of X, Y, Z directions for 2 hours	
Shock			Approx. Max. 75G	
Environment	Ambient temperature		-10 to 70℃, storage: -25 to 85℃	
	Ambient humidity		35 to 85%RH, storage: 35 to 90%RH	
Protection			IP50(IEC standard)	
Cable			ø5mm, 5-wire, Length: 2m, Shield cable (AWG 24, Core diameter: 0.08mm, Number of cores: 40, Insulator out diameter: ø1mm)	
Accessory			ø10mm coupling	
Approval			CE	
Unit weight			Approx. 345g	

※1: '*' pulse is only for A, B phase
※2: Make sure that. Max response revolution should be lower than or equal to max. allowable revolution when selecting the resolution.

$$[\text{Max. response revolution(rpm)} = \frac{\text{Max. response frequency}}{\text{Resolution}} \times 60 \text{ sec}]$$

※Environment resistance is rated at no freezing or condensation.

■ Connections

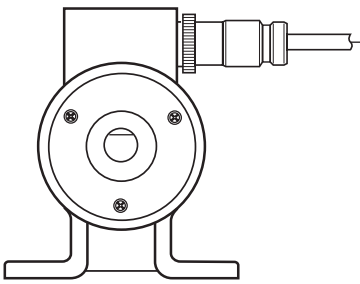

- Black: OUT A
- White: OUT B
- Orange: OUT Z
- Brown: +V(5VDC, 12-24VDC ±5%)
- Blue: GND(0V)
- Shield: .G.

Pin No	Cable color	Function
①	Black	OUT A
②	White	OUT B
③	Brown	+V
④	Blue	GND

Pin No	Cable color	Function
①	Black	OUT A
②	White	OUT B
③	Orange	OUT Z
④	Brown	+V
⑤	Blue	GND

※Z phase output is option.
※Unused wires must be insulated.
※The metal case and shield cable of encoder must be grounded(F.G.).

■ Dimensions

(unit: mm)

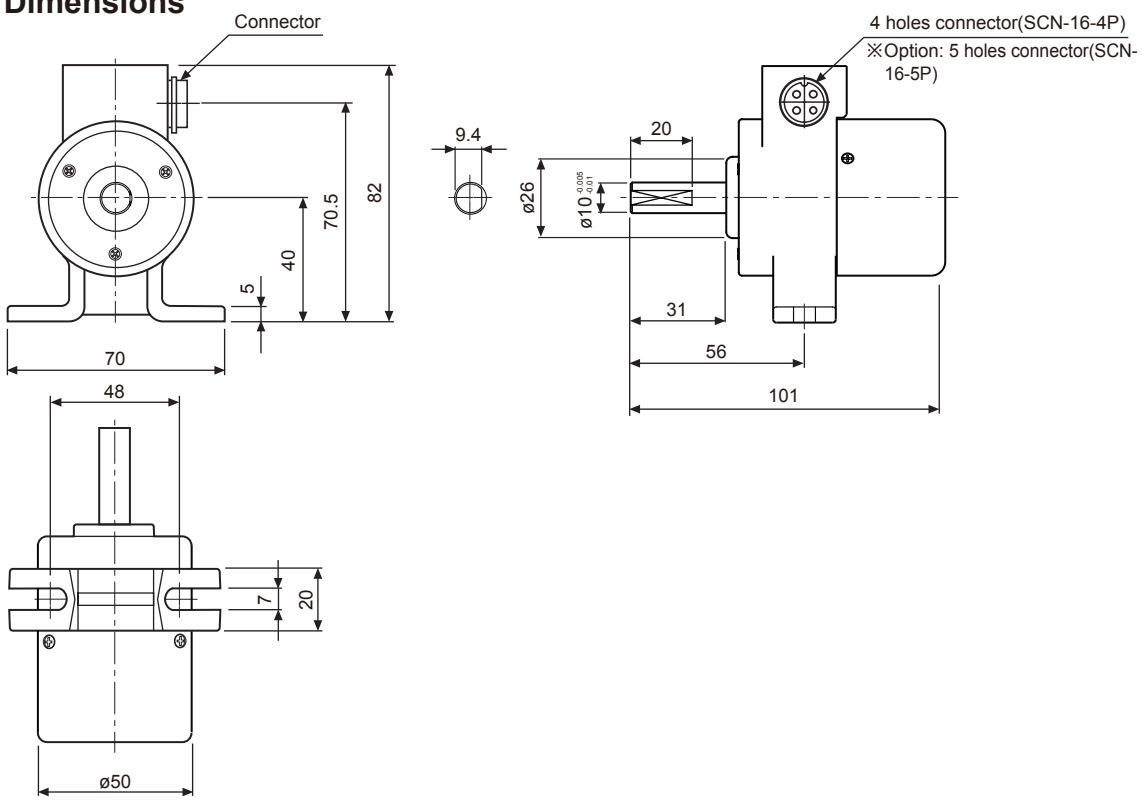

◎ Connector cable

● **ENA(2m, 4-wire)**

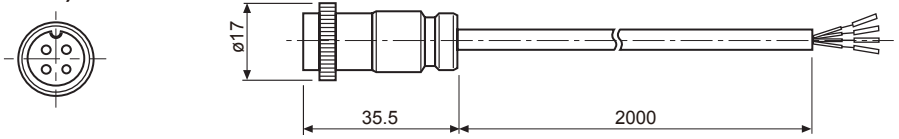

● **ENA(2m, 5-wire) (Option)**

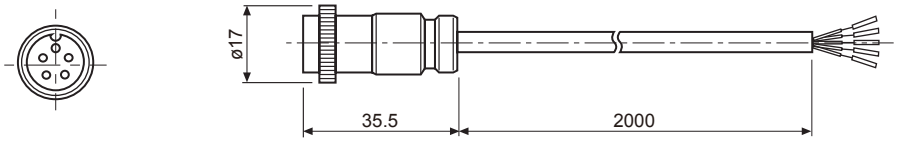

Wheel type of Incremental Rotary Encoder [ENC Series]

■ Ordering information

ENC – 1 – 1 — N — 24 — ☐

Series	Output phase	Min. measuring unit	Output	Power supply	Cable
Wheel type	1: A, B phase	1: 1mm 2: 1cm 3: 1m 4: 0.01yd 5: 0.1yd 6: 1yd	T: Totem pole output N: NPN open collector output V: Voltage output	5: 5VDC ±5% 24: 12-24VDC ±5%	No mark: Cable type C: Connector cable type(※)

※Cable length: 250mm

■ Specifications

Item			Wheel type of incremental rotary encoder	
Appearances			CE	
Resolution(P/R)			Refer to resolution	
Electrical specification	Output phase		A, B phase	
	Phase difference of output		Phase difference between A and B : $\frac{T}{4} \pm \frac{T}{8}$ (T=1cycle of A phase)	
	Control output	Totem pole output	• Low - Load current: Max. 30mA, Residual voltage: Max. 0.4VDC • High - Load current: Max. 10mA, Output voltage(power voltage 5VDC): Min. (power voltage-2.0)VDC, Output voltage(power voltage 12-24VDC): Min. (power voltage-3.0)VDC	
		NPN open collector output	Load current: Max. 30mA, Residual voltage: Max. 0.4VDC	
		Voltage output	Load current: Max. 10mA, Residual voltage: Max. 0.4VDC	
	Response time (Rise/Fall)	Totem pole output	Max. 1μs	• Measuring condition - Cable length: 2m, I sink = 20mA
		NPN open collector output		
		Voltage output		
	Max. Response frequency		180kHz	
	Power supply		5VDC ±5%(ripple P-P: Max. 5%), 12-24VDC ±5%(ripple P-P: Max. 5%)	
	Current consumption		Max. 80mA(disconnection of the load)	
	Insulation resistance		Min. 100MΩ(at 500VDC megger between all terminals and case)	
	Dielectric strength		750VAC 50/60Hz for 1 minute(between all terminals and case)	
	Connection		Cable type, 250mm connector cable type	
Mechanical specification	Starting torque		Depend on coefficient of friction	
	Max. allowable revolution※1		5000rpm	
Vibration			1.5mm amplitude at frequency of 10 to 55Hz(for 1 min.) in each of X, Y, Z directions for 2 hours	
Shock			Approx. Max. 75G	
Environment	Ambient temperature		-10 to 70℃(at non-freezing status), storage: -25 to 85℃	
	Ambient humidity		35 to 85%RH, storage: 35 to 90%RH	
Cable			ø5mm, 5-wire, Length: 2m, Shield cable(line driver output: ø5mm, 8-wire) (AWG24, Core diameter: 0.08mm, Number of cores: 40, Insulator out diameter: ø1mm)	
Protection			IP50(IEC standard)	
Approval			CE	
Unit weight			Approx. 494g	

※1: Make sure that. Max response revolution should be lower than or equal to max. allowable revolution when selecting the resolution.

$$[\text{Max. response revolution(rpm)} = \frac{\text{Max. response frequency}}{\text{Resolution}} \times 60 \text{ sec}]$$

※Environment resistance is rated at no freezing or condensation.

■ Connections

◎ Cable type

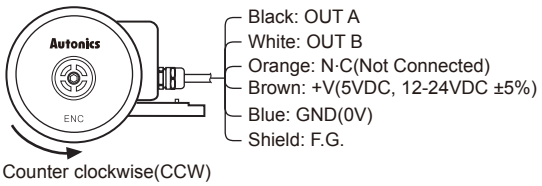

※Unused wires must be insulated.
※The metal case and shield wire of encoder must be grounded(F.G.)

◎ Connector cable type

Pin No	Cable color	Function
①	Black	OUT A
②	White	OUT B
③	Orange	N·C
④	Brown	+V
⑤	Blue	GND
⑥	Shield	F.G.

※F.G.(Field Ground): It must be grounded separately.

■ Dimensions

◎ Cable type

(unit: mm)

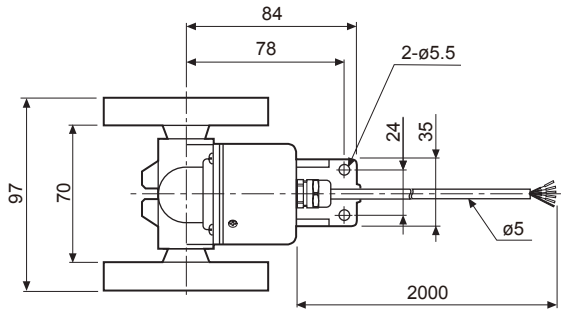

※The wheel circumference is changed according to model(ø), please refer to resolution chart.
※Connector cable is sold separately and see 152 page for specifications.

◎ Connector cable type

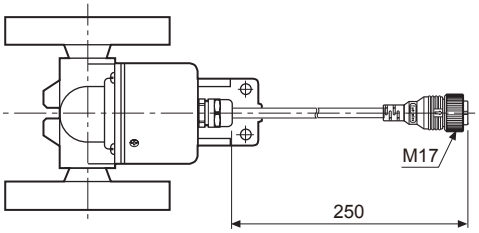

Cable for cable type	Cable for connector cable type
ø5, 5-wire, Length: 2000mm, Shield cable	ø5, 5-wire, Length: 250mm, Shield cable

Incremental manual handle type Rotary encoder [ENH Series]

■ Ordering information

ENH	–	100	–	1	–	T	–	24

Series	Pulse/1 Revolution	Clickstopper position	Control output	Power supply
Handle type	25 100	1: Normal "H" 2: Normal "L"	T: Totem pole output V: Voltage output L: Line driver output(※)	5: 5VDC ±5% 24: 12-24VDC ±5%

※The power of Line driver is only for 5VDC

■ Specifications

Item			Incremental manual handle type of rotary encoder	
Appearances				
Resolution(P/R) ※1			25,100	
Electrical specification	Output phase		A, B phase(line driver output A, $\bar{A}$, B, $\bar{B}$ phase)	
	Phase difference of output		Phase difference between A and B: $\frac{T}{2} \pm \frac{T}{8}$ (T= 1cycle of A phase)	
	Control output	Totem pole output	• Low - Load current: Max. 30mA, Residual voltage: Max. 0.4VDC • High - Load current: Max. 10mA Output voltage(power voltage 5VDC): Min. (power voltage-2.0)VDC, Output voltage(power voltage 12-24VDC): Min. (power voltage-3.0) VDC	
		Voltage output	Load current: Max. 10mA, Residual voltage: Max. 0.4VDC	
		Line driver output	• Low - Load current: Max. 20mA, Residual voltage: Max. 0.5VDC • High - Load current: Max. -20mA, Output voltage: Min. 2.5VDC	
	Response time (Rise/Fall)	Totem pole output	Max. 1μs	• Measuring condition - Cable length: 1m, I sink = 20mA
		Voltage output		
		Line driver output	Max. 0.2μs	
	Power supply		• 5VDC ±5%(ripple P-P: Max.5%) • 12-24VDC ±5%(ripple P-P: Max.5%)	
	Current consumption		Max. 40mA(disconnection of the load), Line driver output: Max. 50mA(disconnection of the load)	
	Max. Response frequency		10kHz	
	Insulation resistance		Min. 100MΩ(at 500VDC megger between all terminals and case)	
	Dielectric strength		750VAC 50/60Hz for 1 minute(between all terminals and case)	
	Connection		Terminal block type	
Mechanical specification		Starting torque	Max. 1kgf·cm(0.098N·m)	
		Shaft loading	Radial: 2kgf, Thrust: 1kgf	
		Max. allowable revolution ※2	Max. 200rpm(Normal), 600rpm(Peak)	
Vibration			1.5mm amplitude at frequency of 10 to 55Hz(for 1 min.) in each of X, Y, Z directions for 2 hours	
Shock			Approx. Max. 50G	
Ambient temperature			-10 to 70℃, storage: -25 to 85℃	
Ambient humidity			35 to 85%RH, storage: 35 to 90℃	
Protection			IP50(IEC standard)	
Weight※3			Approx. 330g(approx. 260g)	

※1: Not indicated type is customizable.
※2: Make sure that. Max response revolution should be lower than or equal to max. allowable revolution when selecting the resolution.

$$[\text{Max. response revolution(rpm)} = \frac{\text{Max. response frequency}}{\text{Resolution}} \times 60 \text{ sec}]$$

※3: The weight with packaging and the weight in parentheses is only unit weight.
※Environment resistance is rated at no freezing or condensation.

■ Connections

●Totem pole output / Voltage output

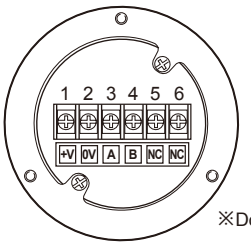

※Do not use terminal No. 5, 6.

●Line driver output

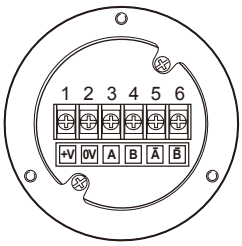

■ Dimensions

(unit: mm)

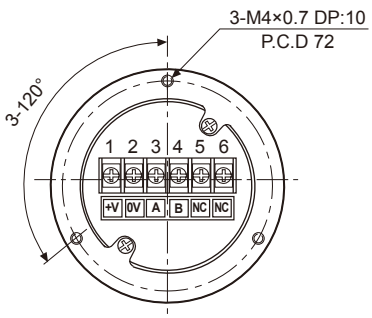

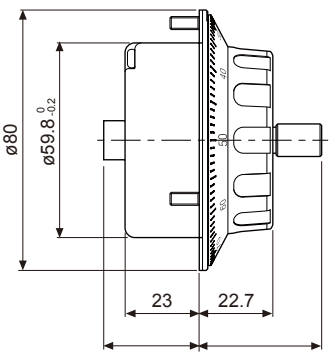

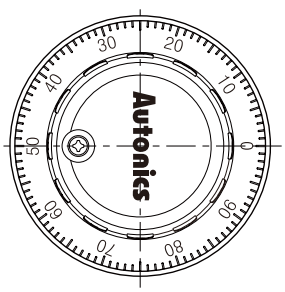

※ø70mm PCD mounting hole type is customizable.

Portable Incremental type with Handle [ENHP Series]

■ Ordering information

ENHP	—	100	—	1	—	L	—	5

Series	Pulse/1Revolution	Clickstopper position	Control output	Power supply
Portable encoder with handle	100	1: Normal "H" 2: Normal "L"	T: Totem pole output L: Line driver output	5: 5VDC ±5% 24: 12-24VDC ±5%

※Line driver power is only 5VDC.

■ Dimensions

(unit: mm)

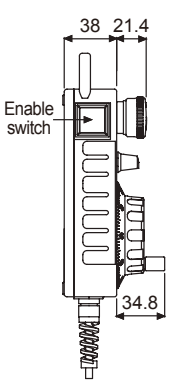

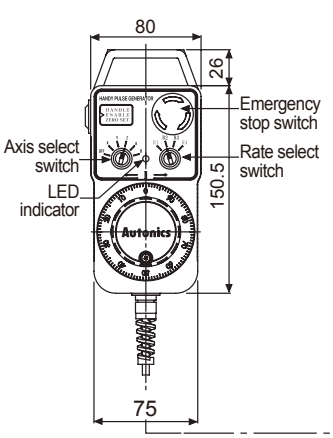

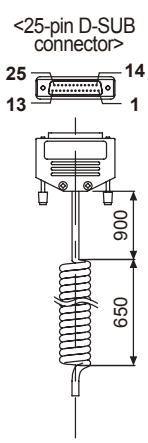

■ Specifications

Item			Portable incremental type of rotary encoder with handle	
Appearances				
Resolution(P/R)			100	
Electrical specification	Output phase		A, B phase(line driver output A, $\overline{A}$, B, $\overline{B}$ phase)	
	Phase difference of output		Phase difference between A and B: $\frac{T}{4} \pm \frac{T}{8}$ (T=1cycle of A phase)	
	Rotary switch output		BCD Code output • Axis select switch(OFF, X, Y, Z, A, B) • Rate select switch(R1, R2, R3, R4)	
	Control output	Totem pole output	• Low - Load current: Max. 30mA, Residual voltage: Max. 0.4VDC • High - Load current: Max. 10mA, Output voltage(power voltage 5VDC): Min.(power voltage-2.0)VDC Output voltage(power voltage 12-24VDC): Min.(power voltage-3.0)VDC	
		Line driver output	• Low - Load current: Max. 20mA, Residual voltage: Max. 0.5VDC • High - Load current: Max. -20mA, Output voltage: Min. 2.5VDC	
	Response time (Rise/Fall)	Totem pole output	Max. 1μs	• Measuring condition - Cable length: 1m, I sink = 20mA
		Line driver output	Max. 0.5μs	
	Power supply		• 5VDC ±5%(ripple P-P: Max. 5%) • 12-24VDC ±5%(ripple P-P: Max. 5%)	
	Current consumption		Max. 40mA(disconnection of the load), Line driver output: Max. 50mA(disconnection of the load)	
	Max. Response frequency		10kHz	
	Insulation resistance		Min. 100MΩ(at 500VDC megger between all terminals and case)	
	Dielectric strength		750VAC 50/60Hz for 1 minute(between all terminals and case)	
	Connection		25Pin D-SUB of connector type	
Mechanical specification		Starting torque	Max. 1kgf·cm(0.098N·m)	
		Shaft loading	Radial: 2kgf, Thrust: 1kgf	
		Max. allowable revolution ※1	Max. 200rpm(Normal), 600rpm(Peak)	
Vibration			1.5mm amplitude at frequency of 10 to 55Hz(for 1 min.) in each of X, Y, Z directions for 2 hours	
Shock			Approx. Max. 50G	
Environment		Ambient temperature	-10 to 70℃, storage: -25 to 85℃	
		Ambient humidity	35 to 85%RH, storage: 35 to 90%RH	
Cable			ø5mm, 18-wire, Length: 8m, Spring code cable (AWG28, Core diameter: 0.08mm, Number of cores: 18, Insulator out diameter: ø0.7mm)	
Protection ※2			IP67(IEC standards) for Box	
Unit weight			Approx. 730g	

※1: Make sure that. Max response revolution should be lower than or equal to max. allowable revolution when selecting the resolution.

[Max. response revolution(rpm)= $\frac{\text{Max. response frequency}}{\text{Resolution}}$ × 60 sec]

※2: It is protection for the rear case and the wiring part.

※Environment resistance is rated at no freezing or condensation.

■ Connections

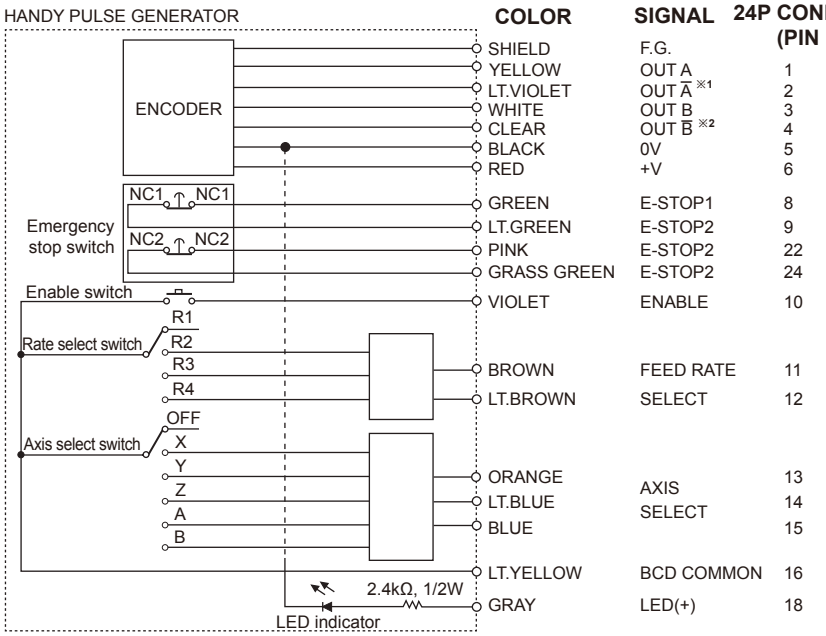

● **AXIS SELECT**

Axis	BCD Code output		
	Pin No.15	Pin No.14	Pin No.13
OFF	0	0	0
X axis	0	0	1
Y axis	0	1	0
Z axis	0	1	1
A axis	1	0	0
B axis	1	0	1

● **RATE SELECT**

Rate	BCD Code output	
	Pin No.12	Pin No.11
R1	0	0
R2	0	1
R3	1	0
R4	1	1

※1: Totem pole output does not have Ā, B̄ output signal.
※COMMON terminal(Pin No. 16) of Axis select switch and Rate select switch is common.

Diameter ø50mm Shaft type Absolute Rotary Encoder [EP50S Series]

■ Ordering information

EP50S **8** – **1024** – **1** **R** – **P** – **24**

Series	Shaft diameter	Pulse/1Revolution	Output code	Revolution direction	Control output	Power supply
Diameter ø50mm shaft type	ø8mm	Refer to resolution	1: BCD Code 2: Binary Code 3: Gray Code	F: Output value increase at CW direction R: Output value increase at CCW direction	P: PNP open collector output N: NPN open collector output	5 : 5VDC ±5% 24: 12-24VDC ±5%

■ Dimensions

(unit: mm)

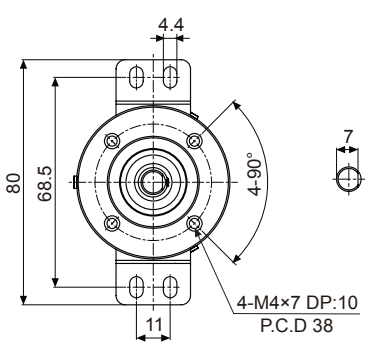

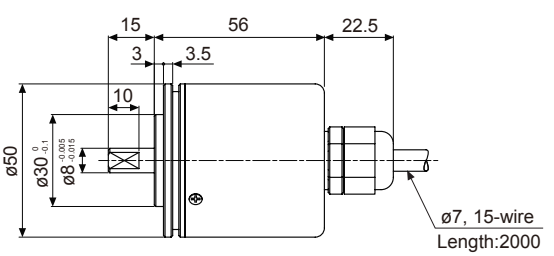

■ Specifications

Item			Diameter ø50mm shaft type of absolute rotary encoder						
Appearances			CE						
Resolution			6, 8, 10, 12, 16, 20, 24, 32, 40, 45, 48, 64, 90, 128, 180, 256, 360, 512, 720, 1024						
Electrical specification	Output code			BCD Code	Binary Code	Gray Code		BCD Code	Binary Code	Gray Code
	Output phase / Output angle※1		1024-division	TS: 0.3515°±15' (13bit)	TS: 0.3515°±15' (10bit)	TS: 0.703°±15' (10bit)	20-division	TP1:12°±60'(1bit) TP2:2°±60'(1bit) TS: 18°±60'(5bit) EP: 18°±60'(1bit)	TP1: 12°±60'(1bit) TP2: 2°±60'(1bit) TS: 18°±60'(5bit) EP: 18°±60'(1bit)	TP1: 12°±60'(1bit) TP2: 2°±60'(1bit) TS: 36°±60'(5bit) EP:18°±60'(1bit)
			720-division	TS: 0.5°±25' (11bit)	TS: 0.5°±25' (10bit)	TS: 1°±25' (10bit)				
			512-division	TS: 0.703°±15' (11bit)	TS: 0.703°±15' (9bit)	TS: 1.406°±15' (9bit)				
			360-division	TS: 1°±25'(10bit)	TS: 1°±25'(9bit)	TS: 2°±25'(9bit)				
			256-division	TS: 1.406°±15' (10bit)	TS: 1.406°±15' (8bit)	TS: 2.8125°±15' (8bit)	16-division	TP1: 15°±60'(1bit) TP2:2°±60'(1bit) TS: 22.5°±60' (5bit) EP: 22.5°±60' (1bit)	TP1:15°±60'(1bit) TP2:2°±60'(1bit) TS: 22.5°±60' (4bit) EP: 22.5°±60' (1bit)	TP1:15°±60'(1bit) TP2: 2°±60'(1bit) TS:45°±60'(4bit) EP: 22.5°±60' (1bit)
			180-division	TS: 2°±25'(9bit)	TS: 2°±25'(8bit)	TS: 4°±25'(8bit)				
			128-division	TS: 2.8125°±15' (9bit)	TS: 2.8125°±15' (7bit)	TS:5S625°±15' (7bit)				
			90-division	TS: 4°±25'(8bit)	TS: 4°±25'(7bit)	TS: 8°±25'(7bit)				
			64-division	TS: 5.625°±15'(7bit)	TS: 5.625°±15'(6bit)	TS: 11.25°±15'(6bit)	12-division	TP1:15°±60'(1bit) TP2:3°±60'(1bit) TS:30°±60'(5bit) EP:30°±60'(1bit)	TP1: 15°±60'(1bit) TP2: 3°±60'(1bit) TS: 30°±60'(4bit) EP: 30°±60'(1bit)	TP1: 15°±60'(1bit) TP2: 3°±60'(1bit) TS: 60°±60'(4bit) EP: 30°±60'(1bit)
			48-division	TS: 7.5°±25'(7bit)	TS: 7.5°±25'(6bit)	TS: 15°±25'(6bit)				
			45-division	TS: 8°±25'(7bit)	TS: 8°±25'(6bit)	TS: 16°±25'(6bit)				
			40-division	TP1: 5°±60'(1bit) TP2: 2°±60'(1bit) TS: 9°±60'(6bit) EP: 9°±60'(1bit)	TP1: 5°±60'(1bit) TP2: 2°±60'(1bit) TS: 9°±60'(6bit) EP: 9°±60'(1bit)	TP1: 5°±60'(1bit) TP2: 2°±60'(1bit) TS: 18°±60'(6bit) EP: 9°±60'(1bit)	10-division	TP1:30°±60'(1bit) TP2: 12°±60'(1bit) TS: 36°±60'(4bit) EP: 36°±60'(1bit)	TP1: 30°±60'(1bit) TP2: 12°±60'(1bit) TS: 36°±60'(4bit) EP: 36°±60'(1bit)	TP1: 30°±60'(1bit) TP2: 12°±60'(1bit) TS: 72°±60'(4bit) EP: 36°±60'(1bit)
			32-division	TP1:7°±60'(1bit) TP2: 2°±60'(1bit) TS: 11.25°±60'(6bit) EP: 11.25°±60'(1bit)	TP1:7°±60'(1bit) TP2: 2°±60'(1bit) TS: 11.25°±60'(5bit) EP: 11.25°±60'(1bit)	TP1: 7°±60'(1bit) TP2: 2°±60'(1bit) TS: 22.5°±60'(5bit) EP: 11.25°±60'(1bit)	10-division	TP1:39°±60'(1bit) TP2: 15°±60'(1bit) TS: 45°±60'(3bit) EP: 45°±60'(1bit)	TP1: 39°±60'(1bit) TP2: 15°±60'(1bit) TS: 45°±60'(3bit) EP: 45°±60'(1bit)	TP1: 39°±60'(1bit) TP2: 15°±60'(1bit) TS: 90°±60'(3bit) EP: 45°±60'(1bit)
			24-division	TP1: 8°±60'(1bit) TP2: 3°±60'(1bit) TS: 15°±60'(6bit) EP: 15°±60'(1bit)	TP1: 8°±60'(1bit) TP2: 3°±60'(1bit) TS: 15°±60'(5bit) EP: 15°±60'(1bit)	TP1: 8°±60'(1bit) TP2: 3°±60'(1bit) TS: 30°±60'(5bit) EP: 15°±60'(1bit)	6-division	TP1: 53°±60'(1bit) TP2: 15°±60'(1bit) TS: 60°±60'(3bit) EP: 60°±60'(1bit)	TP1:53°±60'(1bit) TP2: 15°±60'(1bit) TS: 60°±60'(3bit) EP: 60°±60'(1bit)	TP1: 53°±60'(1bit) TP2: 15°±60'(1bit) TS: 120°±60'(3bit) EP: 60°±60'(1bit)
	Control output	PNP open collector output	Output voltage: Min. (power supply-1.5)VDC, Load current: Max. 32mA							
		NPN open collector output	Load current: Max. 32mA, Residual voltage: Max. 1VDC							
	Response time(Rise/Fall)		Ton=800nsec, Toff=Max. 800nsec(Cable length: 2m, I sink = 32mA)							
	Max. Response frequency		35kHz							
	Power supply		• 5VDC ±5%(ripple P-P: Max. 5%) • 12-24VDC ±5%(ripple P-P: Max. 5%)							
	Current consumption		Max. 100mA(disconnection of the load)							
	Insulation resistance		Min. 100MΩ(at 500VDC megger between all terminals and case)							
	Dielectric strength		750VAC 50/60Hz for 1 minute(between all terminals and case)							
	Connection		Cable type(Cable gland)							
Item			Diameter ø50mm shaft type of absolute rotary encoder							
Mechanical specification	Starting torque		Max. 40gf·cm(0.004N·m)							
	Moment of inertia		Max. 40g·cm²(4×10⁻⁶kg·m²)							
	Shaft loading		Radial: 10kgf, Thrust: 2.5kgf							
	Max. allowable revolution※2		3000rpm							
Vibration			1.5mm amplitude at frequency of 10 to 55Hz(for 1 min.) in each of X, Y, Z directions for 2 hours							
Shock			Approx. Max. 50G							
Environ-ment	Ambient temperature		-10 to 70℃, storage: -25 to 85℃							
	Ambient humidity		35 to 85%RH, storage: 35 to 90%RH							
Protection			IP64(IEC standard)							
Cable			ø7mm, 15-wire, Length: 2m, Shield cable (AWG 28, Core diameter: 0.08mm, Number of cores: 40, Insulator out diameter: ø0.8mm)							
Accessory			Fixing bracket, Coupling							
Approval			CE							
Unit weight			Approx. 380g							

※1: TS=Signal Pulse, Tp=Timing Pulse, EP=Even Parity

※2: Make sure that. Max response revolution should be lower than or equal to max. allowable revolution when selecting the resolution.

$$[\text{Max. response revolution(rpm)} = \frac{\text{Max. response frequency}}{\text{Resolution}} \times 60 \text{ sec}]$$

※Environment resistance is rated at no freezing or condensation.

■ Connections

● BCD Code

	Color \ Resolution	6-division	8-division	10-division	12-division	16-division	20-division	24-division	32-division	40-division	45-division	48-division	64-division	90-division	128-division	80-division	256-division	360-division	512-division	720-division	1024-division
Power	White	+V																			
Power	Boack	0V																			
Outpur wire	Brown	2^0																			
Outpur wire	Red	2^1																			
Outpur wire	Orange	2^2																			
Outpur wire	Yellow	N·C		2^3																	
Outpur wire	Blue	N·C			2^0×10																
Outpur wire	Purple	N·C						2^{21}×10													
Outpur wire	Gray	N·C									2^2×10										
Outpur wire	White/Brown	TP1									N·C			2^3×10							
Outpur wire	White/Red	TP2									N·C				2^0×10						
Outpur wire	White/Orange	EP									N·C						2^1×100				
Outpur wire	White/Yellow	N·C																	2^2×100		
Outpur wire	White/Blue	N·C																			2^3×100
Outpur wire	White/Purple	N·C																			2^0×1000
Outpur wire	Shield wire	F.G.																			

※Unused wires must be insulated.
※Encoder case and shield wire must be grounded(F.G.).
※N·C: Not Connected.
※Output cable must not be short-circuited, because Driver IC is used in output circuit.

● Binary Code/Gray Code

	Color \ Resolution	6-division	8-division	10-division	12-division	16-division	20-division	24-division	32-division	40-division	45-division	48-division	64-division	90-division	128-division	80-division	256-division	360-division	512-division	720-division	1024-division
Power	White	+V																			
Power	Boack	0V																			
Outpur wire	Brown	2^0																			
Outpur wire	Red	2^1																			
Outpur wire	Orange	2^2																			
Outpur wire	Yellow	N·C		2^3																	
Outpur wire	Blue	N·C					2^4														
Outpur wire	Purple	N·C								2^5											
Outpur wire	Gray	N·C												2^6							
Outpur wire	White/Brown	TP1									N·C					2^7					
Outpur wire	White/Red	TP2									N·C							2^8			
Outpur wire	White/Orange	EP									N·C									2^9	
Outpur wire	Shield wire	F.G.																			

※Unused wires must be insulated.
※Encoder case and shield wire must be grounded(F.G.).
※N·C: Not Connected.
※Output cable must not be short-circuited, because Driver IC is used in output circuit.

Diameter ø50mm Shaft type Absolute Rotary Encoder [EP50SP Series]

■ Ordering information

EP50S	6	P	–	360	–	3	F	–	N	–	24

Series	Shaft diameter	Outer meterial	Pulse/1Revolution	Output code	Revolution direction	Control output	Power supply
Diameter ø50mm shaft type	6: ø6mm 8: ø8mm	Plastic	360	3: Gray Code	F: Output value increase at CW direction	N: NPN open collector output	5 : 5VDC ±5% 24: 12-24VDC ±5%

■ Specifications

Item			Diameter ø50mm shaft type of absolute rotary encoder
Appearances			
Resolution(P/R)			360
Electrical specification	Output code		Gray Code(Shift Gray Code)
	Output phase / Output angle		TS: Signal Pulse(9bit), TS: 2°±25'
	Control output		NPN Open collector- Load current: Max. 15mA, Residual voltage: Max. 1VDC
	Response time(Rise/Fall)		Ton=Max. 1μs, Toff=Max. 1μs(Cable length: 2m, I sink = 15mA)
	Max. Response frequency		20kHz
	Power supply		• 5VDC ±5%(ripple P-P: Max. 5%) • 12-24VDC ±5%(ripple P-P: Max. 5%)
	Current consumption		Max. 80mA(disconnection of the load)
	Connection		Cable type(Cable gland)
Mechanical specification		Starting torque	Max. 40gf·cm(0.004N·m)
		Moment of inertia	Max. 50g·cm²(5×10^{-7}kg·m²)
		Shaft loading	Radial: 2kgf, Thrust: 1kgf
		Max. allowable revolution※1	3000rpm
Insulation resistance			Min. 100MΩ(at 500VDC megger between all terminals and case)
Dielectric strength			750VAC 50/60Hz for 1 minute(between all terminals and case)
Vibration			1.5mm amplitude at frequency of 10 to 55Hz(for 1 min.) in each of X, Y, Z directions for 2 hours
Shock			Approx. Max. 50G
Environment		Ambient temperature	-10 to 70℃, storage: -25 to 85℃
		Ambient humidity	35 to 85%RH, storage: 35 to 90%RH
Protection			IP50(IEC standard)
Cable			ø6mm, 12-wire, Length: 2m, Shield cable
Accessory			Fixing bracket, Coupling
Weight ※2			Approx. 308g(Approx. 250g)

※1: Make sure that. Max response revolution should be lower than or equal to max. allowable revolution when selecting the resolution.

$$[\text{Max. response revolution(rpm)}= \frac{\text{Max. response frequency}}{\text{Resolution}} \times 60 \text{ sec}]$$

※2: The weight is with packaging and the weight in parentheses is only unit weight.
※Environment resistance is rated at no freezing or condensation.

■ Connections

● Gray Code

Color \ Resolution		360-division				
Power	White	+V(5VDC, 12-24VDC)				
	Boack	0V(GND)				
Outpur wire	Brown	2^0	Blue	2^4	White/Red	2^8
	Red	2^1	Purple	2^5	White/Orange	N·C
	Orange	2^2	Gray	2^6	Shield wire	F.G.
	Yellow	2^3	White/Brown	2^7		

■ Dimensions

(unit: mm)

Model	A	B
E50S6P	Ø6 $^{-0.013}_{-0.007}$	5
E50S8P	Ø8 $^{-0.015}_{-0.01}$	7

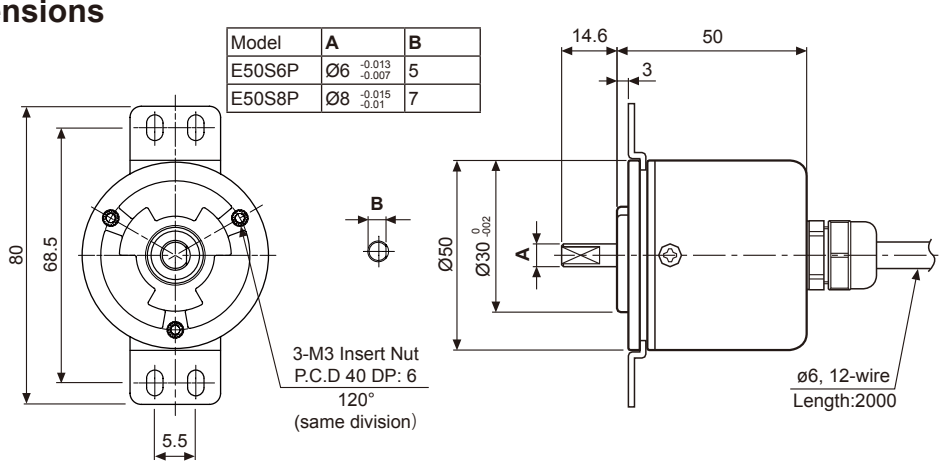

Diameter ø58mm Shaft/Hollow Built-in type Absolute Rotary Encoder [EP58SP Series]

■ Ordering information

EP58SC **10** – **1024** – **1** **R** – **P** – **24**

Series Diameter ø58mm	Shaft diameter			Resolution/ 1revolution	Output code	Rotating direction	Control output	Power supply
SC: Shaft clamping	External	10	ø10mm	Refer to resolution	1: BCD Code 2: Binary Code 3: Gray Code	F: Output value increases at CW direction R: Output value increases at CCW direction ※Shaft based	P:PNP open collector output N:NPN open collector output	5 : 5VDC ±5% 24: 12-24VDC ±5%
SS: Shaft synchro		6	ø6mm					
HB: Hollow built-in	Inner	8	ø8mm					

※Gray code is customizable.

■ Connections

● BCD Code

Color	Resolution (Division)	45-division	48-division	64-division	90-division	128-division	80-division	256-division	360-division	512-division	720-division	1024-division
F.G.	White	+V										
	Black	GND(0V)										
Output wire	Brown	2^0										
	Red	2^1										
	Orange	2^2										
	Yellow	2^3										
	Blue	(2^0×10)										
	Purple	(2^1×10)										
	Gray	(2^2×10)										
	White/Brown	N·C		2^3×10								
	White/Red	N·C			2^0×100							
	White/Orange	N·C						2^1×100				
	White/Yellow	N·C								2^2×100		
	White/Blue	N·C										2^3×100
	White/Purple	N·C										2^0×1000
	Shield wire	F.G.										

● Binary Code / Gray Code

Color	Resolution (Division)	45-division	48-division	64-division	90-division	128-division	80-division	256-division	360-division	512-division	720-division	1024-division
Power	White	+V										
	Black	GND(0V)										
Output wire	Brown	2^0										
	Red	2^1										
	Orange	2^2										
	Yellow	2^3										
	Blue	2^4										
	Purple	2^5										
	Gray	N·C		2^6								
	White/Brown	N·C					2^7					
	White/Red	N·C							2^8			
	White/Orange	N·C									2^9	
	White/Yellow	N·C										
	White/Blue	N·C										
	White/Purple	N·C										
	Shield wire	F.G.										

※Unused wires must be insulated.
※Encoder case and shield wire must be grounded (F.G.).
※N·C: Not connected.
※Output cable must not be short-circuited, because Driver IC is used in output circuit.

■ Specifications

Type		Diameter ø58mm absolute rotary encoder							
Appearances									
Resolution		720, 360, 180, 90, 45 division				1024, 512, 256, 128, 64 division			
Electrical specification	Output code		BCD Code	Binary Code	Gray Code		BCD Code	Binary Code	Gray Code
	Output phase/ Output angle	720-division	TS:Signal Pulse (11bit) TS:0.5°±25'	TS:Signal Pulse (10bit) TS:0.5°±25'	TS:Signal Pulse (10bit) TS:1°±25'	1024 division	TS:Signal Pulse (13bit) TS:0.3515°±15'	TS:Signal Pulse (10bit) TS:0.3515°±15'	TS:Signal Pulse (10bit) TS:0.703°±15'
		360-division	TS:Signal Pulse (10bit) TS:1°±25'	TS:Signal Pulse (9bit) TS:1°±25'	TS:Signal Pulse (9bit) TS:2°±25'	512 division	TS:Signal Pulse (11bit) TS:0.703°±15'	TS:Signal Pulse] (9bit) TS:0.703°±15'	TS:Signal Pulse (9bit) TS:1.406°±15'
		180-division	TS:Signal Pulse (9bit) TS:2°±25'	TS:Signal Pulse (8bit) TS:2°±25'	TS:Signal Pulse (8bit) TS:4°±25'	256 division	TS:Signal Pulse (10bit) TS:1.406°±15'	TS:Signal Pulse (8bit) TS:1.406°±15'	TS:Signal Pulse (8bit) TS:2.8125°±15'
		90-division	TS:Signal Pulse (8bit) TS:4°±25'	TS:Signal Pulse (7bit) TS:4°±25'	TS:Signal Pulse (7bit) TS:8°±25'	128 division	TS:Signal Pulse (9bit) TS:2.8125°±15'	TS:Signal Pulse (7bit) TS:2.8125°±15'	TS:Signal Pulse (7bit) TS:5.625°±15'
		45-division	TS:Signal Pulse (7bit) TS:8°±25'	TS:Signal Pulse (6bit) TS:8°±25'	TS:Signal Pulse (6bit) TS:16°±25'	64 division	TS:Signal Pulse (7bit) TS:5.625°±15'	TS:Signal Pulse (6bit) TS:5.625°±15'	TS:Signal Pulse (6bit) TS:11.25°±15'
	Control output: PNP open collector output	Output voltage: Min.(power supply-1.5VDC), Load current: Max. 32mA							
	Control output: NPN open collector output	Load current: Max. 32mA, Residual voltage: Max. 1VDC							
	Response time(Rise/Fall)	Ton=800nsec, Toff=Max. 800nsec(Cable: 2m, I sink = 32mA)							
	Max. Response frequency	35kHz							
	Power supply	• 5VDC ±5%(ripple P-P: Max. 5%) • 12-24VDC ±5%(ripple P-P: Max. 5%)							
	Current consumption	Max. 100mA(disconnection of the load)							
	Insulation resistance	Min. 100MΩ(at 500VDC megger between all terminals and case)							
	Dielectric strength	750VAC 50/60Hz for 1 minute(between all terminals and case)							
	Connection	Cable type(Cable gland)							
Mechanical specification	Starting torque	• SC/SS type: Max. 40gf·cm(0.004N·m) • HB type: Max. 90gf·cm(0.009N·m)							
	Moment of inertia	• SC/SS type: Max. 15g·cm²(1.5×10⁻⁶kg·m²) • HB type: Max. 20g·cm²(2.0×10⁻⁶kg·m²)							
	Shaft loading	• SC/SS type: Radial: 10kg·f, Thrust: 2.5kg·f • HB type: Radial: 2kg·f, Thrust: 1kg·f							
	Max. allowable revolution※1	3000rpm							
Vibration		1.5mm amplitude at frequency of 10 to 55Hz(for 1 min.) in each of X, Y, Z directions for 2 hours							
Shock		Approx. Max. 50G							
Environment	Ambient temperature	-10 to 70°C, storage: -25 to 85°C							
	Ambient humidity	35 to 85%RH, storage: 35 to 90%RH							
Protection		IP50(IEC standard)							
Cable		ø7mm, 15-wire, Length: 2m, Shield cable (AWG28, Core diameter: 0.08mm, Number of cores: 40, Insulator out diameter: ø0.8mm)							
Accessories		ø10mm(SC type)/ø6mm(SS type) coupling, Fixing bracket							
Approval		CE							
Unit weight		• Clamping: Approx. 435g • Synchro: Approx. 415g • Built-in: Approx. 410g							

※1: Make sure that. Max response revolution should be lower than or equal to max. allowable revolution when selecting the resolution.

$$\text{[Max. response revolution(rpm)]} = \frac{\text{Max. response frequency}}{\text{Resolution}} \times 60\ \text{sec}]$$

※Environment resistance is rated at no freezing or condensation.

■ Dimensions

(unit: mm)

◎ Shaft clamping type

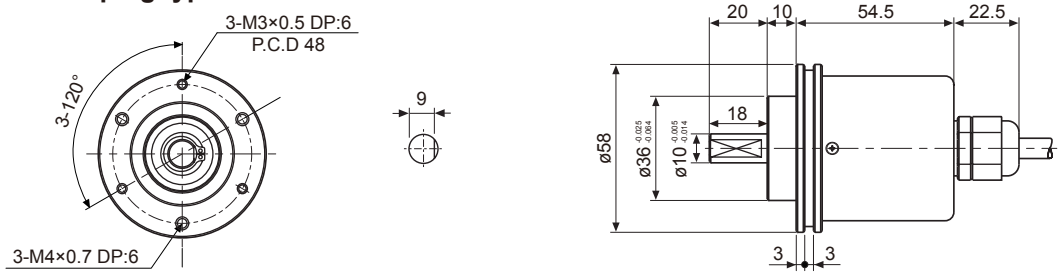

◎ Shaft synchro type

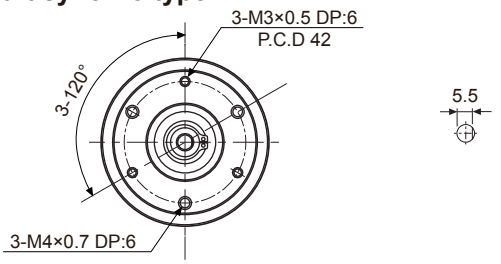

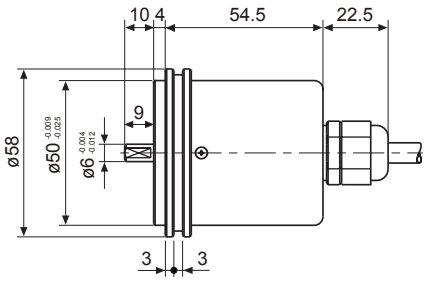

◎ Hollow built-in type

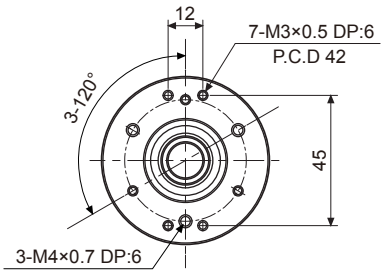

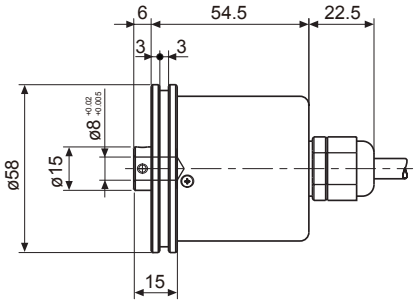

Diameter ø60mm Shaft type Absolute Rotary encoder [ENP Series]

■ Ordering information

ENP – 1 – 1 – 1 – R – 360 – P

Series	Output code	Output	Power supply	Revolution direction	Revolution/1 Pulse	control output
Diameter ø60mm shaft type (External shaft diameter: ø10mm)	1: BCD Code	0: Negative logic 1: Positive logic	0: 5VDC ±5% 1: 12-24VDC ±5%	F: Output value increase at CW direction R: Output value increase at CCW direction	006: 6-divison 016 :16-divison 008: 8-divison 024: 24-divison 012: 12-divison 360: 360-divison	P: PNP open collector output N: NPN open collector output

■ Connections

Wire color \ Resolution		6-division	8-division	12-division	16-division	24-division	360-division
Power wire	White ※1	+V					
	Black ※1	GND(0V)					
	Shield wire	F.G.					
Output wire	Black	TP1 ※2					2^0
	Brown	2^0	2^0	2^0	2^0	2^0	2^1
	Red	2^1	2^1	2^1	2^1	2^1	2^2
	Orange	2^2	2^2	2^2	2^2	2^2	2^3
	Yellow	N·C	2^3	2^3	2^3	2^3	2^0×10
	Green	N·C	N·C	2^0×10	2^0×10	2^0×10	2^1×10
	Blue	N·C	N·C	N·C	N·C	2^1×10	2^2×10
	Purple	N·C					2^3×10
	Gray	TP2 ※2					2^0×100
	White	EP(PARITY) ※3					2^1×100
	Shield wire	F.G.					

※1: Insulator external diameter is Ø1.5mm.
※2: TP1/TP2: Because low resolution model has long output signal period, this signal for enable is easy to determine signal recognization point about output.
※3: EP: Parity signal. It outputs odd parity.
※Unused wire must be insulated.
※Encoder case and shield wire must be grounded.
※N·C: Not connected.
※Output cable must not be short-circuited, because Driver IC is used in output circuit.

■ Specifications

Item			Diameter ø60mm shaft type of absolute rotary encoder					
Model	PNP open collector output		**ENP-111□-006-P**	**ENP-111□-008-P**	**ENP-111□-012-P**	**ENP-111□-016-P**	**ENP-111□-024-P**	**ENP-11□□-360-P**
	NPN open collector output		**ENP-111□-006-N**	**ENP-101□-008-N**	**ENP-101□-012-N**	**ENP-101□-016-N**	**ENP-101□-024-N**	**ENP-10□□-360-N**
Appearances								
Resolution			6-division	8-division	12-division	16-division	24-division	360-division
Electrical specification	Output phase		TP(Timing Pulse) : 2bit TS(Signal Pulse) : 4bit(BCD, EP)	TP(Timing Pulse) : 2bit TS(Signal Pulse) : 5bit(BCD, EP)	TP(Timing Pulse) : 2bit TS(Signal Pulse) : 6bit(BCD, EP)	TP(Timing Pulse) : 2bit TS(Signal Pulse) : 6bit(BCD, EP)	TP(Timing Pulse) : 2bit TS(Signal Pulse) : 7bit(BCD, EP)	TS(Signal Pulse) : 10bit(BCD)
	Output of phase differences		TP1: 53° ±30' TP2: 15° ±30' P: 60° ±30' TS: 56° ±30'	TP1: 39° ±30' TP2: 15° ±30' P: 45° ±30' TS: 42° ±30'	TP1: 3° ±30' TP2: 15° ±30' P: 30° ±30' TS: 26° ±30'	TP1: 2° ±30' TP2: 11.25° ±30' P: 22.5° ±30' TS: 19.5° ±30'	TP1: 8° ±30' TP2: 3° ±30' P: 15° ±30' TS: 11° ±30'	TS: 1° ±30'
	Control output	PNP open collector output	Output voltage: Min. (power supply-1.5V)VDC, Load current: Max. 32mA					
		NPN open collector output	Load current: Max. 32mA, Residual voltage: Max. 1VDC					
	Response time (Rise/Fall)	PNP open collector output	Ton=800ns, Toff=Max. 800ns(Cable length: 1m, I sink=32mA)					
		NPN open collector output	Ton=800ns, Toff=Max. 800ns(Cable length: 1m, I sink=32mA)					
	Max. Response frequency		20kHz					
	Power supply		• 5VDC ±5%(ripple P-P: Max. 5%) • 12-24VDC ±5%(ripple P-P: Max. 5%)					
	Current consumption		Max. 100mA(disconnection of the load)					
	Insulation resistance		Min. 100MΩ(at 500VDC megger between all terminals and case)					
	Dielectric strength		750VAC 50/60Hz for 1 minute(between all terminals and case)					
	Connection		Cable type					
Mechanical specification	Starting toque		Max. 500gf·cm(0.05N·m)					
	Moment of inertia		Max. 300g·cm²(3×10-5kg.m²)					
	Shaft loading		Radial: 10kgf, Thrust: 2.5kgf					
	Mechanical revolution※1		3,600rpm					
Vibration			1.5mm amplitude at frequency of 10 to 55Hz(for 1 min.) in each of X, Y, Z directions for 2 hours					
Shock			Approx. Max. 75G					
Environ -ment	Ambient temperature		-10 to 70℃, storage: -25 to 85℃					
	Ambient humidity		35 to 85%RH, storage: 35 to 90%RH					
Protection			IP50(IEC standard)					
Cable			ø8mm, 12-wire, Length: 1m, Double shield cable (AWG24, Core diameter: 0.08mm, Number of cores: 40, Insulator diameter: ø1mm)					
Accessory			Mounting bracket, coupling					
Weight ※2			Approx. 478g(approx. 400g)					

※1: Make sure that. Max response revolution should be lower than or equal to max. allowable revolution when selecting the resolution.

$$[\text{Max. response revolution(rpm)} = \frac{\text{Max. response frequency}}{\text{Resolution}} \times 60 \text{ sec}]$$

※2: The weight with packaging and the weight in parentheses is only unit weight.
※Environment resistance is rated at no freezing or condensation.

■ Dimensions

(unit: mm)

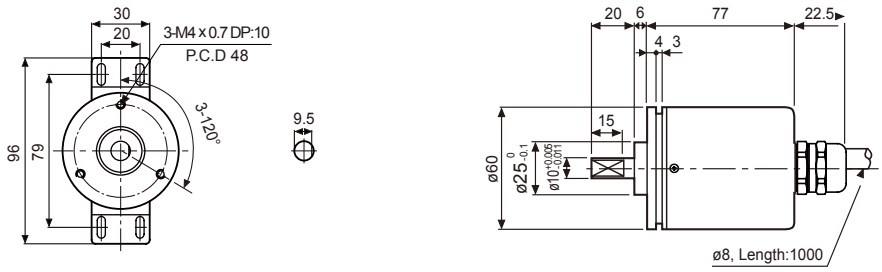

Diameter ø50mm Shaft type Absolute Multi-turn Rotary Encoder [EPM50 Series]

■ Ordering information

EPM50S	8	–	10	13	–	B	–	PN	–	24	–	

Series	Shaft diameter	Single-turn	Multi-turn	Output code	Control output	Power supply	Cable
Diameter ø50mm	ø8mm	10bit (1024 division)	13bit (8192 revolution)	Binary Code	PN: Parallel NPN open collector output S: SSI	12-24VDC±5%	No mark: Axial cable type S: Radial cable type

■ Specifications

Type			ø50mm Multi-turn absolute encoder	
Model			**EPM50S8-1013-B-S-24**	**EPM50S8-1013-B-PN-24**
Appearances			CE Line-up	
Resolution	Single-turn		1024 division(10Bit)	
	Multi-turn		8192 revolution(13Bit)	
Rotation limit when power is off ※1			±90°	
Electrical specification	Output	Output code	24bit, Binary 2 code	Binary 2 code
		Output Interface	SSI(Synchronous Serial Interface)	Parallel
		Output type	Line driver	NPN open collector output
		Output signal	Single-turn data, Multi-turn count, OVF alarm※2	
		Line driver output	• Low: Sink current - max. 20mA, Residual voltage - max. 0.5VDC • High: Sink current - max. -20mA, Output voltage - max. 2.5VDC	—
		NPN open collector output	—	Sink current: Max. 32mA, Residual voltage: Max. 1VDC
		Logic	—	Negative logic output
		Response time	—	Max. 1μs (Cable: 2m, I sink = 32mA)
	Input	Input signal	Single-turn data reset ※3, Multi-turn count reset ※4, Direction, Clear	
			—	Latch
		Input level	High: 5-24VDC, Low: 0-1.2VDC	
		Input logic	Low active※5, HIGH or OPEN for common use	
		Input time	Direction: Over 100ms	
			Single-turn data reset: Over 100ms	
			Multi-turn count reset: Over 100ms	
			Clear: Over 100ms	
			No Latch function	Latch: Over 500μs
		SSI Clock Input Frequency	100kHz to 1MHz	—

※1: It calibrates the multi-turn counts by comparing single-turn data before/after power off without counting multi-turn counts when power is off. It shall be used on the condition that no over-rated revolution occurred since proper multi-turn data may not be available if any revolutions occurred over ±90°from the position when power is off.
※2: OVF alarm is ON when multi-turn count is out of counting range (0 to 8191 revolution).
It shall be initialized by changing the setting of direction or applying multi-turn count reset or clear signals.
※3: Single-turn data shall be initialized as「0」when single-turn data reset is input.
※4: Multi-turn count shall be initialized as「0 revolution」when multi-turn count reset is input.
※5: High active is customizable.

■ Specifications

Type		ø50mm Multi-turn absolute encoder	
Model		**EPM50S8-1013-B-S-24**	**EPM50S8-1013-B-PN-24**
Electrical specification	Max. Response frequency	—	50kHz
	Power supply	12-24VDC, ±5%(ripple P-P: Max. 5%)	
	Current consumption	Max. 150mA(Disconnection of the load)	Max. 100mA(Disconnection of the load)
	Insulation resistance	Min. 100MΩ(at 500VDC between all terminals and case)	
	Dielectric strength	750VAC 50/60Hz for 1 minute(between all terminals and case)	
	Connection	Cable type(Cable gland)	
Mechanical specification	Starting torque	Max. 40gf·cm(0.004N·m)	
	Moment of inertia	Max. 40g·cm²(4×10^{-6}kg·m²)	
	Shaft loading	Radial: 10kgf, Thrust: 2.5kgf	
	Max. revolution※6	3000rpm	
Vibration		1.5mm amplitude at frequency of 10 to 55Hz(for 1 min.) in each of X, Y, Z directions for 2 hours	
Shock		Approx. Max. 50G	
Environ-ment	Ambient temperature	-10 to 70℃, storage: -25 to 85℃	
	Ambient humidity	35 to 85%RH, storage: 35 to 90%RH	
Protection		IP64(IEC standard), Radial cable type: IP50(IEC standard)	
Cable		ø6mm, 10-wire, Length: 2m, Shield cable (AWG28, Core diameter: 0.08mm, Number of cores: 19, Insulation out diameter: ø0.8mm)	ø6mm, 17-wire×2, Length: 2m, Shield cable (AWG28, Core diameter: 0.08mm, Number of cores: 17, Insulation out diameter: ø0.8mm)
Accessory		Mounting bracket, Coupling	
Approval		CE	
Unit weight		Approx. 322g	Approx. 475g

※6: Make sure that. Max response revolution should be lower than or equal to max. allowable revolution when selecting the resolution.

$$[\text{Max. response revolution(rpm)}= \frac{\text{Max. response frequency}}{\text{Resolution}} \times 60 \text{ sec}]$$

※Environment resistance is rated at no freezing or condensation.

■ Connections

● SSI output

Cable			
Cable color	Description	Cable color	Description
Brown	CLOCK+	Gray	Single-turn data reset
Red	CLOCK-	Blue	Multi-turn count reset
Orange	DATA+	Purple	Clear
Yellow	DATA-	Green	Direction
White	+V(12-24VDC)		
Black	GND(0V)		
Shield wire	Signal shield cable(F.G.)		

● Parallel output

Multi-turn count cable(Sheath color: Black)		
Cable color	Description	
Brown	Multi-turn count	2^0
Red		2^1
Orange		2^2
Yellow		2^3
Green		2^4
Blue		2^5
Purple		2^6
Gray		2^7
Pink		2^8
Clear		2^9
Light brown		2^{10}
Light yellow		2^{11}
Light green		2^{12}
Light blue	OVF	
Light purple	Multi-turn count reset	
White	+V(12-24VDC)	
Black	GND(0V)	
Shield wire	Signal shield cable(F.G.)	

Single-turn data cable(Sheath color: Gray)		
Cable color	Description	
Brown	Single-turn data	2^0
Red		2^1
Orange		2^2
Yellow		2^3
Green		2^4
Blue		2^5
Purple		2^6
Gray		2^7
Pink		2^8
Clear		2^9
Light brown	NC	
Light yellow	Direction	
Light green	Latch	
Light blue	Clear	
Light purple	Single-turn data reset	
White	+V(12-24VDC)	
Black	GND(0V)	
Shield wire	Signal shield cable(F.G.)	

※Please wire properly.
※As for parallel output, it is recommended to connect +V and GND of both multi-turn count cable and single-turn data cable.
※The metal case and shield wire of encoder should be grounded (F.G.).
※Input/Output cable must not be short-circuited, because Driver IC is used in output circuit.

■ Dimensions

(unit: mm)

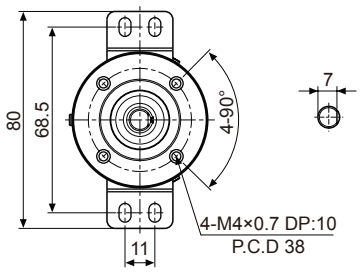

● **SSI output**

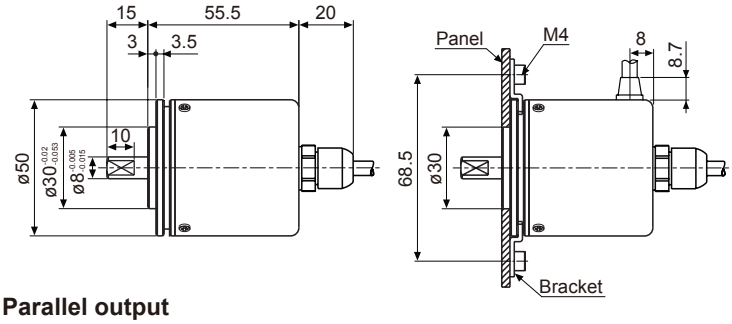

● **Parallel output**

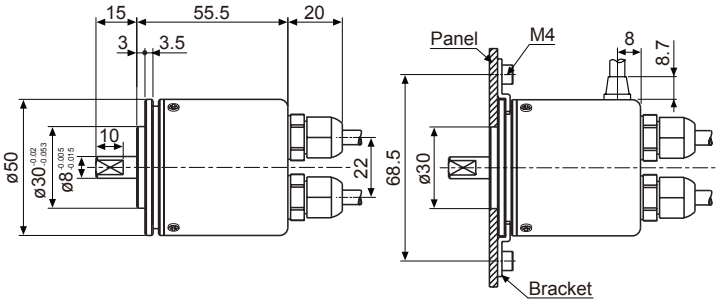

Absolute Wire-type Linear Scale encoder [EWLS Series]

■ Ordering information

EWLS	–	50	–	512	–	B	–	PN	–	P

Series	Body size	Measuring range	Output code	Control output	Power supply
Absolute Wire-type Linear Scale	50mm×50mm	512mm	B: Binary Code G: Gray Code	Parallel NPN open collector output	12-24VDC ±5%

■ Specifications

Item			Absolute Wire-type Linear Scale	
Model			**EWLS50-512-B-PN-24**	**EWLS50-512-G-PN-24**
Appearances			NEW CE 	
Measuring range			512mm	
Max. output pulse/mm			5,120division/512mm	
Min.resolution			0.1mm	
Accuracy			±0.1/100mm	
Response speed			Max. 500mm/sec.	
Wire movement limit when power is off ※1			Max.±20mm	
Electrical specification	Output	Output code	Binary	Gray
		Output signal	Data, Overflow alarm	
		Output type	NPN open collector output	
		Output capacity	Load current: Max. 32mA, Residual voltage: Max. 1VDC	
		Logic	Negative logic output	
		Response time (Up/Down)	Max.1μs(Cable length: 2m, I sink=32mA)	
	Input	Input signal	Reset	
		Input level	High: 5-24VDC, Low: 0-1.2VDC	
		Input logic	Low Active, OPEN or HIGH for common use	
		Input time	Min. 100mS	
	Max. Response frequency		50kHz	
	Power supply		12-24VDC ± 5%(ripple P-P: Max. 5%)	
	Current consumption		Max. 150mA (disconnection of the load)	
	Insulation resistance		Min. 100MΩ (500VDC megger)	
	Dielectic strength		750VAC 50/60Hz for 1minute	
	Connection		Cable type(Cable Gland)	
Wire tensile force			0.5N to 4N(50g·f to 400g·f)	
Vibration			1.5mm amplitude at frequency of 10 to 55Hz(for 1 min.) in each of X, Y, Z directions for 2 hours	
Shock			Approx. Max. 50G	
Environment	Ambient temperature		-10 to 70℃, storage: -25 to 85℃	
	Ambient humidity		35 to 85%RH, storage: 35 to 90%RH	
Cable			ø6mm, 17-wire, Length: 2m, Shield cable (AWG28, Core diameter: 0.08mm, Number of cores: 19, Insulator out diameter: ø0.8mm)	
Material			Cap: SPCD, Body: A2024, Wire: SUS303	
Accessories			Hexagon wrench screw(M4×8)	
Approval			CE	
Unit weight			Approx. 450g	

※1: The product cannot process data when the power is OFF. It calibrates the data comparing values of before and after power ON status. It shall be used on the condition that wire movement limit because proper data may not be available if any wire movement occurred over ±20mm from the position when power is off.

※Environment resistance is rated at no freezing or condensation.

■ Connections

Cable color	Description	
Brown	Data signal output	2^0
Red		2^1
Orange		2^2
Yellow		2^3
Green		2^4
Blue		2^5
Purple		2^6
Gray		2^7
Pink		2^8
Clear		2^9
Light brown		2^{10}
Light yellow		2^{11}
Light green		2^{12}
Light blue	Overflow alarm signal output	
Light Purple	Reset signal input	
White	+V(12-24VDC)	
Black	GND(0V)	
Shield wire	Signal shield cable(F.G.)	

■ Dimensions

(unit: mm)

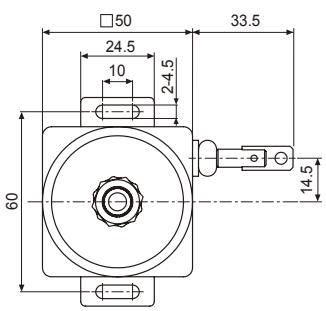

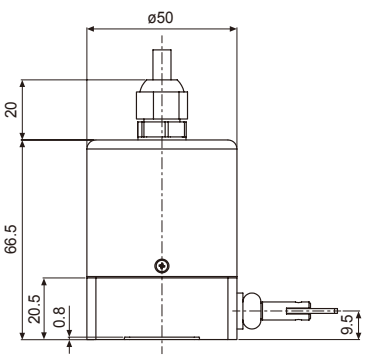

● **Hook**

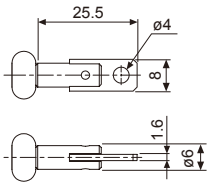

Flexible coupling [ERB Series]

■ Ordering information

ERB | **A** - **19** | **C** - **d_1/d_2**

Bore diameters	Number/Number	Bore diameters
Connection type	S	Set screw
	C	Clamp
External diameter	Number	External diameter(mm)
Type	A	Double beam(Normal Type)
Item	ERB	Radial beam type coupling

■ Specifications

Model		ERB-A-19C-□	ERB-A-19S-□	ERB-A-26C-□	ERB-A-26S-□
Appearances		NEW		NEW	
Connection type		Clamp	Set screw	Clamp	Set screw
Max. revolutions		8000rpm	20000rpm	6000rpm	15000 rpm
Max. torque		1.2 N·m(12.17 kgf·cm)		3.0 N·m(30.42 kgf·cm)	
Rated torque		0.6 N·m(6.08 kgf·cm)		1.5 N·m(15.21 kgf·cm)	
Mounting bolt (Mounting torque)		M2.5(1N·m)	M3(0.7N·m)	M3(1.7N·m)	M4(1.7N·m)
Torsional stiffness		140 N·m/rad		240 N·m/rad	
Moment of inertia		6.4×10^{-7} kg·m^2		3.4×10^{-6} kg·m^2	
Max. allowable misalign-ment	Angular misalignment	2.5°			
	Parallel misalignment	0.15mm		0.2mm	
	End-play	±0.3mm		±0.4mm	
Standard bore diameter (tolerance h7)		ø4, ø5, ø6mm		ø6, ø8mm	
Min. allowable bore diameter		ø4mm		ø5mm	
Max. allowable bore diameter		ø8mm		ø12mm	
Material		Aluminum(AL 7075-T6), Alumite treated surface			
Unit weight		12g		33g	

■ Dimensions

(unit: mm)

◎ Clamp type

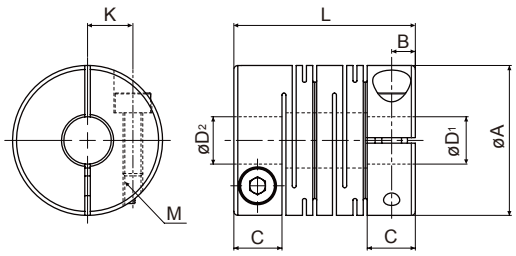

Model	øA	L	$øD_1$	$øD_2$	M	C	B	K
ERB-A-19C-04/04	19	23	$4^{+0.018}_{0}$	$4^{+0.018}_{0}$	M2.5	6.1	3	5.75
ERB-A-19C-04/05				$5^{+0.018}_{0}$				
ERB-A-19C-04/06				$6^{+0.018}_{0}$				
ERB-A-19C-05/05			$5^{+0.018}_{0}$	$5^{+0.018}_{0}$				
ERB-A-19C-05/06				$6^{+0.018}_{0}$				
ERB-A-19C-06/06			$6^{+0.018}_{0}$					
ERB-A-26C-06/06	26	31.4	$6^{+0.018}_{0}$	$6^{+0.018}_{0}$	M3	7.4	3.7	8.55
ERB-A-26C-06/08				$8^{+0.018}_{0}$				
ERB-A-26C-08/08			$8^{+0.018}_{0}$					

◎ Set screw type

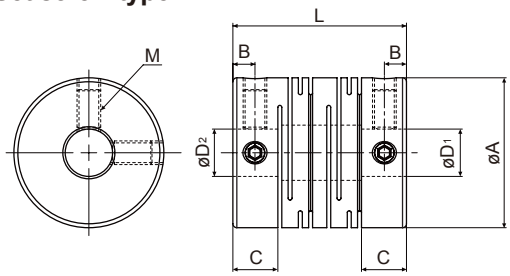

Model	øA	L	$øD_1$	$øD_2$	M	C	B
ERB-A-19S-04/04	19	22	$4^{+0.018}_{0}$	$4^{+0.018}_{0}$	M3	5.7	2.8
ERB-A-19S-04/05				$5^{+0.018}_{0}$			
ERB-A-19S-04/06				$6^{+0.018}_{0}$			
ERB-A-19S-05/05			$5^{+0.018}_{0}$	$5^{+0.018}_{0}$			
ERB-A-19S-05/06				$6^{+0.018}_{0}$			
ERB-A-19S-06/06			$6^{+0.018}_{0}$				
ERB-A-26S-06/06	26	30	$6^{+0.018}_{0}$	$6^{+0.018}_{0}$	M4	6.8	3.4
ERB-A-26S-06/08				$8^{+0.018}_{0}$			
ERB-A-26S-08/08			$8^{+0.018}_{0}$				