Multi-channel(4 channel / 2 channel) modular type PID control [TM Series]

■ Ordering information

TM 4 – N 2 R B

Module type	B		Basic module
	E		Expansion module ※1
Control output	2 Channel	R	Relay output
		C	Current or SSR drive voltage output selectable
	4 Channel	R	Relay output
		S	SSR drive voltage output
Power supply	2		24VDC
Option input/output	2 Channel	2	Alarm1+Alarm2 Relay output
		4	Alarm1+Alarm2+Alarm3+Alarm4 Relay output
	4 Channel	N	None(※No auxiliary input/output)
Channel	2		2 Channel
	4		4 Channel
Item	TM		Multi-channel modular temperature controller

※Make sure to purchase both expansion module and basic module together because power supply/communication terminals are provided with basic modules only.

■ Specifications

Series		TM2-22RB	TM2-42RB	TM2-22RE	TM2-42RE	TM2-22CB	TM2-42CB	TM2-22CE	TM2-42CE	TM4-N2RB	TM4-N2RE	TM4-N2SB	TM4-N2SE
Appearances		Line-up											
Channel		2 Channel (Each channel insulated-Dielectric strength 1,000VAC)								4 Channel (Each channel insulated-Dielectric strength 1,000VAC)			
Power Supply		24VDC											
Allowable voltage range		90 to 110% of rated voltage											
Power consumption		Max. 5W											
Display type		Non-display type Parameter setting & monitoring with external devices (PC or PLC)											
Input type	RTD	DPt100Ω, JPt100Ω 3 wire (allowable line resistance max. 5Ω per a wire)											
	Thermocouple	K, J, E, T, L, N, U, R, S, B, C, G, PLII (13types)											
Display accuracy	RTD	(PV ±0.5% or ±1℃, select the higher one) ±1digit Max.											
	Thermocouple※1												
	CT input	±5% F.S. ±1digit Max.								—			
	Current output	±1.5% F.S. ±1digit Max.								—			
Influence of temperature※2	RTD	(PV ±0.5% or ±2℃, select the higher one) ±1digit Max.(In case of thermocouple input, it is ±5℃ at -100℃ below.)											
	Thermocouple	• Thermocouples L, U, C, G, R, S, B: (PV ±0.5% or ±5℃, select the higher one) ±1digit Max.											

※1: In case of thermocouple K, T, N, J, E at -100℃ below and L, U, PlatineII, it is ±2℃ ±1digit Max.
In case of thermocouple B, display accuracy cannot be ensured under 400℃.
In case of thermocouple R, S at 200℃ below and thermocouple C, G, it is 3℃ ±1digit Max.
※2: Applied when used out of range 23 ±5℃.

Series		TM2-22RB	TM2-42RB	TM2-22RE	TM2-42RE	TM2-22CB	TM2-42CB	TM2-22CE	TM2-42CE	TM4-N2RB	TM4-N2RE	TM4-N2SB	TM4-N2SE
Control output	Relay	250VAC 3A 1a				—				250VAC 3A 1a		—	
	SSR	—				12VDC ±3V 30mA Max.				—		22VDC ±3V30mA Max.	
	Current	—				DC 4-20mA or DC 0-20mA selectable(load 500Ω Max.)				—			
Option output	Relay	250VAC 3A 1a								—			
	Communication	RS485 Communication output (Modbus RTU)											
Option input	CT input	0.0-50.0A(Primary current meaurement range) ※CT ratio = 1/1000								—			
	Digital input	• Contact input: ON Max. 1kΩ, OFF Min. 100kΩ • Non-contact input: ON Max. 1.5V residual voltage, OFF Max. 0.1mA leakage current • Outflow current: Approx. 0.5mA								—			
Control method	Heating, cooling	ON/OFF control mode, P, PI, PD, PID control mode											
	Heating&cooling												
Hysteresis		1 to 100℃/℉ (0.1 to 100℃/℉) variable								1 to 100 digit			
Proportional band (P)		0.1 to 999.9℃/℉											
Integral time (I)		0 to 9999 sec.											
Derivative time (D)		0 to 9999 sec.											
Control period (T)		0.1 to 120.0 sec. (only relay output and SSR drive voltage output type)											
Manual reset value		0.0 to 100.0%											
Sampling period		50ms (2 channel synchronous sampling)								100ms (4 channel synchronous sampling)			
Dielectric strength		1,000VAC 50/60Hz for 1 min. (between power source terminal and input terminal)											
Vibration		0.75mm amplitude at frequency of 5 to 55Hz(for 1 min.) in each of X, Y, Z directions for 2 hours											
Relay life cycle	Mechanical	Min. 10,000,000 operations											
	Electrical	Min. 100,000 operations (250VAC 3A resistance load)											
Insulation resistance		100MΩ(at 500VDC megger)											
Noise resistance		±0.5kV the square wave noise (pulse width: 1us) by the noise simulator											
Environ-ment	Ambient temperature	-10 to 50℃, storage: -20 to 60℃											
	Ambient humidity	35 to 85%RH, storage: 35 to 85%RH											
Accessory		Expansion connector											
		Power / communication connector (※Basic module only)											
Insulation type		Double insulation or reinforced insulation (Mark: ⧈, Dielectric strength between the measuring input part and the power part: 1kV)											
Approval		CE c UL us											
Unit weight		Approx. 144g	Approx. 152g	Approx. 135g	Approx. 143g	Approx. 139g	Approx. 148g	Approx. 130g	Approx. 139g	Approx. 174g	Approx. 166g	Approx. 160g	Approx. 152g

※Environment resistance is rated at no freezing or condensation.

■ Connections and block diagram

● TM2 Series

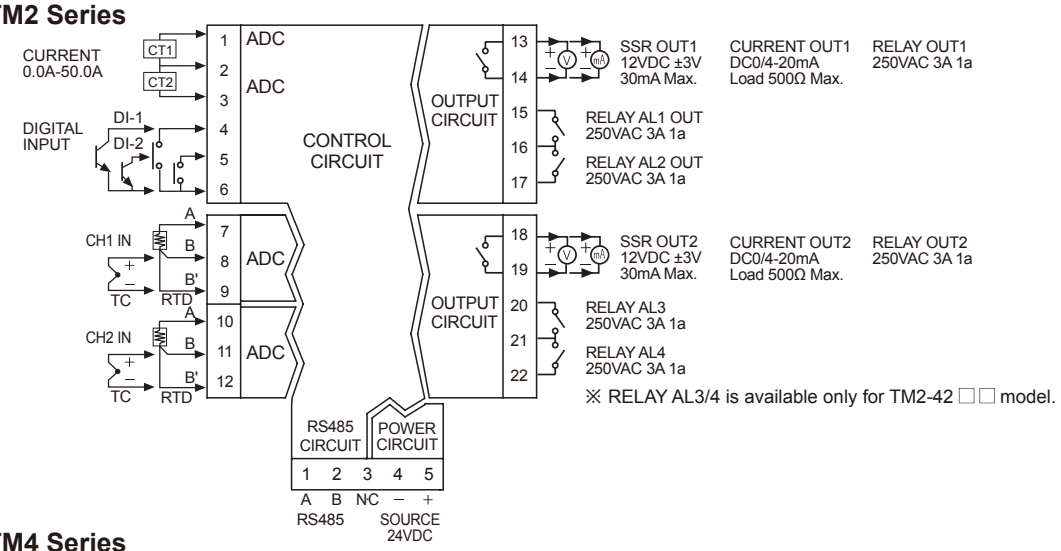

● TM4 Series

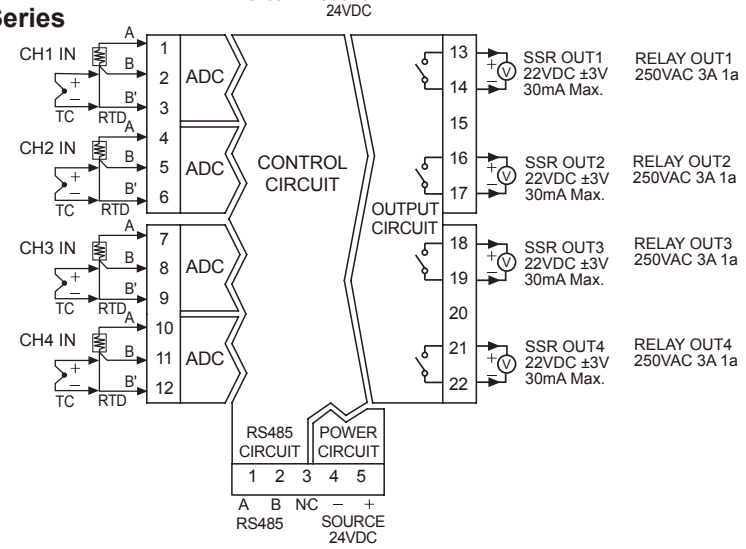

■ Dimensions

(unit: mm)

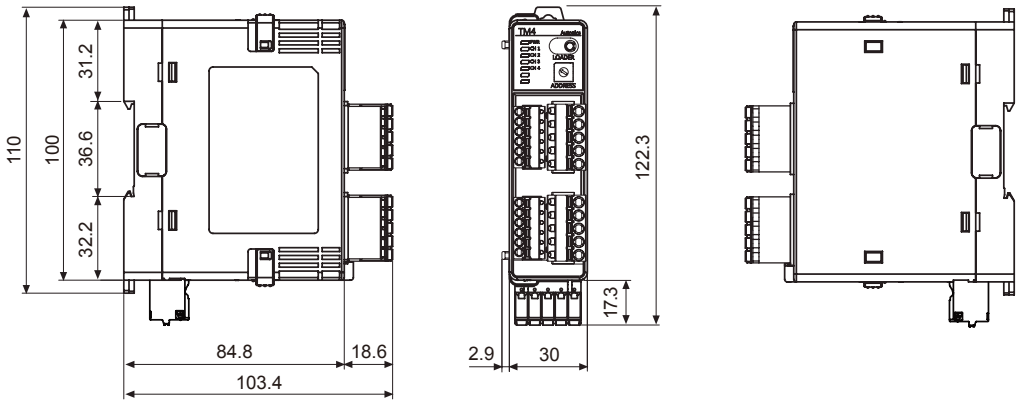

High function/High performance PID control [TK Series]

■ Ordering information

TK 4 S — 1 4 R R

OUT2 control output※3

Standard	N	None ※Select in case of standard control(Heating or Cooling)
Heating & Cooling	R	Relay output
	C	Current output+SSR drive voltage output

OUT1 control output※2

R	Relay output
S	SSRP output
C	Current output+SSR drive voltage output

Power supply

4	100-240VAC 50/60Hz

Option input/output ※1

(★) N	1	Standard	Alarm output1+CT input※4
		Heating&Cooling	Alarm output2※5
	2	Standard	Alarm output1+Alarm output2
	D	Standard	Alarm output 1+Digital input(DI-1, DI-2)
		Heating&Cooling	Digital input(DI-1, DI-2)
	R	Standard	Alarm output1+Transmission output
		Heating&Cooling	Transmission output
	T	Standard	Alarm output1+RS485 communication output
		Heating&Cooling	RS485 communication output
SP	1	Alarm output1	
S M W H L	1	Alarm output1	
	2	Alarm output1+Alarm output2	
	R	Alarm output1+Transmission output	
	T	Alarm output1+RS485 communication output	
	A	Alarm output1+Alarm output2+Transmission output	
	B	Alarm output1+Alarm output2+RS485 communication output	

Size

(★) N	DIN W48×H24mm
SP	DIN W48×H48mm(11pin plug type)※6
S	DIN W48×H48mm(Terminal block type)
M	DIN W72×H72mm
W	DIN W96×H48mm
H	DIN W48×H96mm
L	DIN W96×H96mm

Digit

4	9999(4digit)

Item

TK	Temperature / Process Controller

※1: In case of TK4N, TK4SP, option output may be limited due to number of terminals.

※2: In case of OUT1 control output, 'S' is able to SSR standard/cycle/phase control by SSRP voltage output as the voltage output model. 'C' is able to select one between current output or SSR drive(standard) voltage output.

※3: Select 'R' or 'C' type which has OUT2 control output to use heating&cooling control. Select 'N' type which does not have OUT2 control output to use standard control.

※4: (★) CT input of TK4N is available only for the standard model which has alarm output1.

※5: (★) The heating&cooling model of TK4N-1□□□ has only alarm output 2.

※6: Sockets for TK4SP (PG-11, PS-11) are sold separately.

■ Specifications

Series		TK4N(★)	TK4SP	TK4S	TK4M	TK4W	TK4H	TK4L
Appearances & Dimensions		NEW [W48×H24×L93mm]	Upgrade [W48×H48×L64.5mm]	[W48×H48×L72.2mm]	Upgrade [W72×H72×L64.5m]	Upgrade [W96×H48×L64.5mm]	Upgrade [W48×H96×L64.5mm]	Upgrade [W96×H96×L64.5mm]
Power supply		100-240VAC 50/60Hz						
Allowable voltage range		90 to 110% of rated voltage						
Power consumption		Max. 6VA	Max. 8VA					
Display method		7 Segment (PV: red, SV: green), Other display part (green, yellow, red) LED method						
Character size	PV(W×H)	4.5×7.2mm	7.0×14.0mm		9.5×20.0mm	8.5×17.0mm	7.0×14.6mm	11.0×22.0mm
	SV(W×H)	3.5×5.8mm	5.0×10.0mm		7.5×15.0mm	6.0×12.0mm	6.0×12.0mm	7.0×14.0mm
Input type	RTD	JPt100Ω, DPt100Ω, DPt50Ω, Cu100Ω, Cu50Ω, Nikel 120Ω (6 types)						
	Thermocouple	K, J, E, T, L, N, U, R, S, B, C, G, PLII (13 types)						
	Analog	Voltage: 0-100mV, 0-5V, 1-5V, 0-10V (4 types) / Current: 0-20mA, 4-20mA (2 types)						
Display accuracy	RTD	• At room temperature(23℃±5℃): (PV ±0.3% or ±1℃, select the higher one) ±1digit ※1 • Out of room temperature range: (PV ±0.5% or ±2℃, select the higher one) ±1digit ※In case of TK4SP Series, ±1℃ will be added.						
	Thermocouple							
	Analog	• At room temperature(23℃±5℃): ±0.3% F.S. ±1digit, • Out of range of room temperature: ±0.5℃% F.S. ±1digit						
	CT input	±5% F.S. ±1digit						
Control output	Relay	OUT1, OUT2: 250VAC 3A 1a						
	SSR	11VDC±2V 20mA Max.						
	Current	DC4-20mA or DC0-20mA selectable (load 500Ω Max.)						
Alarm output	Relay	AL1, AL2 Relay: 250VAC 3A 1a ※TK4N AL2: 250VAC 0.5A 1a(Max.125VA), TK4SP has only AL1.						
Option output	Transmission	DC4-20mA (load 500Ω Max., Accuracy: ±0.3% F.S.)						
	Communication	RS485 communication output (Modbus RTU)						
Option input	CT input	0.0-50.0A(primary heater current value measuring range) ※CT ratio = 1/1000 (except TK4SP)						
	Digital input	• Contact Input: ON - Max. 2kΩ, OFF - Min. 90kΩ • Non-contact Input: ON - Residual votage max. 1.0V, OFF - Leakage current max. 0.1mA • Outflow current: Approx. 0.5mA ※TK4S/M-1EA(Due to limited terminals), TK4N/H/W/L-2EA(except TK4SP)						
Control type	Heating,cooling	ON/OFF, P, PI, PD, PID control						
	Heating&cooling							
Hysteresis		• Thermcouples / RTD: 1 to 100℃/℉ (0.1 to 100.0℃/℉) variable • Analog: 1 to 100digit						
Proportional band (P)		0.1 to 999.9℃/℉ (0.1 to 999.9%)						
Integral time (I)		0 to 9999 sec.						
Derivative time (D)		0 to 9999 sec.						
Control period (T)		0.1 to 120.0 sec.(※relay output and SSR drive output only)						
Manual reset value		0.0 to 100.0%						
Sampling period		50ms						
Dielectric strength		2,000VAC 50/60Hz for 1min. (between power source terminal and input terminal)						
Vibration		0.75mm amplitude at frequency of 5 to 55Hz(for 1min.) in each of X, Y, Z direction for 2 hours						
Relay life cycle	Mechanical	OUT1/2: Over 5,000,000 times, AL1/2: Over 20,000,000 times (TK4H/W/L: Over 5,000,000 times)						
	Electrical	OUT1/2: Over 200,000 times, AL1/2: Over 100,000 times (TK4H/W/L: Over 200,000 times)						
Insulation resistance		Min. 100MΩ (at 500VDC megger)						
Noise resistance		±2kV R-phase, S-phase the square wave noise (pulse width: 1us) by the noise simulator						
Memory retention		Approx. 10 years (when using non-volatile semiconductor memory type)						

※1: ◎ At room temperature(23℃±5℃)
- Thermocouple K, J, T, N, E type, below -100℃ / Thermocouple L, U, PLII type, RTD(★) Cu50Ω, DPt50Ω : (PV ±0.3% or ±2℃, select the higher one) ±1digit
- Thermocouple C, G, R, S type, below 200℃: (PV ±0.3% or ±3℃, select the higher one) ±1digit
- Thermocouple B type, below 400℃: There is no accuracy standards.

◎ Out of room temperature range
- RTD Cu50Ω, DPt50Ω: (PV ±0.5% or ±3℃, select the higher one) ±1digit
- Thermocouple R, S, B, C, G type: (PV ±0.5% or ±5℃, select the higher one) ±1digit
- Others, Below -100℃: Within ±5℃

In case of TK4SP Series, ±1℃ will be added to the degree standard.

Series		TK4N(★)	TK4SP	TK4S	TK4M	TK4W	TK4H	TK4L
Environ-ment	Ambient temperature	-10 to 50℃, storage: -20 to 60℃						
	Ambient humidity	35 to 85%RH, storage: 35 to 85%RH						
Protection		IP65 (Front panel) ※TK4SP: IP50 (Front panel)						
Insulation type		Double insulation or reinforced insulation (Mark: ⧈, Dielectric strength between the measuring input part and the power part: 2kV)						
Approval		CE c UL us						
Weight※2		Approx. 140g (Approx. 70g)	Approx. 130g (Approx. 85g)	Approx. 150g (Approx. 105g)	Approx. 210g (Approx. 140g)	Approx. 211g(Approx. 141g)		Approx. 294g (Approx. 198g)

※2: The weight is with packaging and the weight in parentheses is only unit weight.
※Environment resistance is rated at no freezing or condensation.

■ Connections

※Please check the polarity when connecting temperature sensor or analog input.
※Standard model has shaded terminals only.
(★)Operation mode of heating&cooling OUT2 relay output model is heating or cooling, OUT2 is available as alarm output 3. (except TK4N Series).
(★)Operation mode of heating&cooling OUT2 current output model is heating or cooling, OUT2 is available as transmission output 2.

● TK4N

Line-up

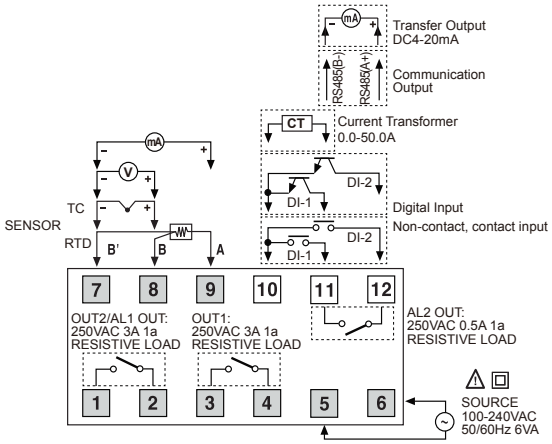

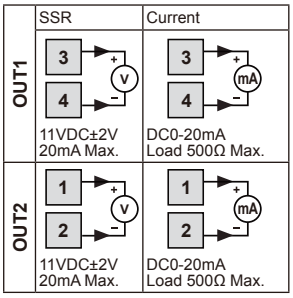

● TK4S

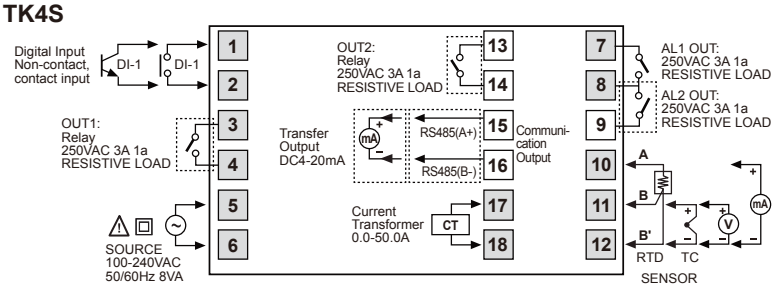

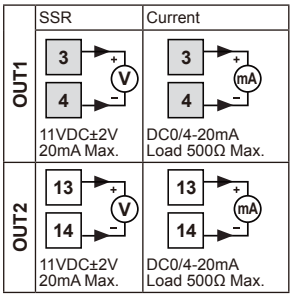

● TK4SP

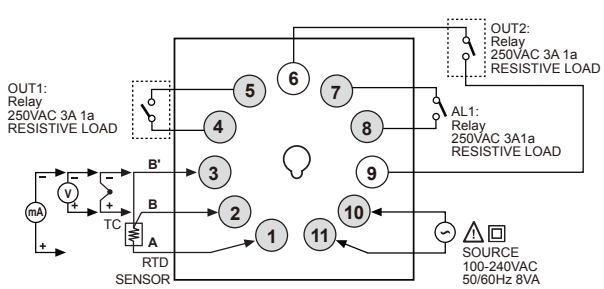

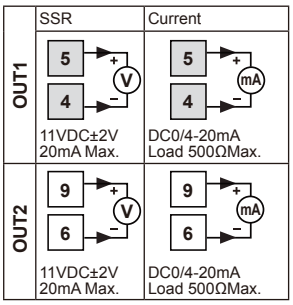

■ Connections

※Please check the polarity when connecting temperature sensor or analog input.
※Standard model has shaded terminals only.
(★)Operation mode of heating&cooling OUT2 relay output model is heating or cooling, OUT2 is available as alarm output 3. (except TK4N Series).
(★)Operation mode of heating&cooling OUT2 current output model is heating or cooling, OUT2 is available as transmission output 2.

● TK4M

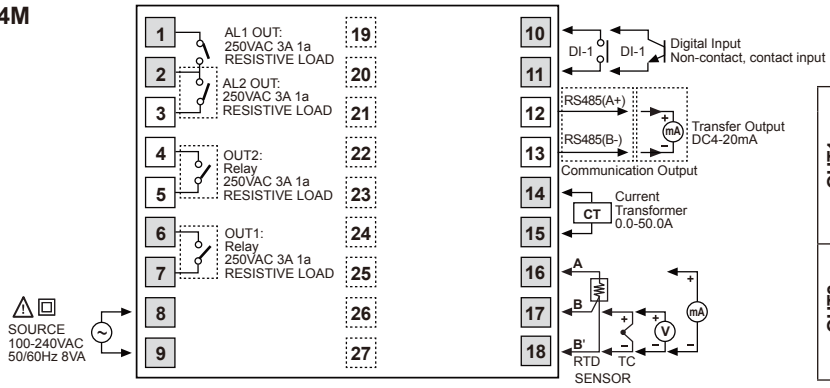

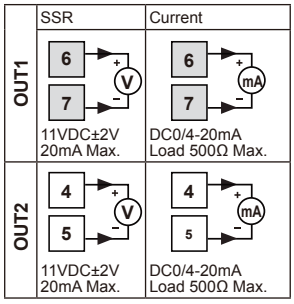

● TK4H / TK4W / TK4L

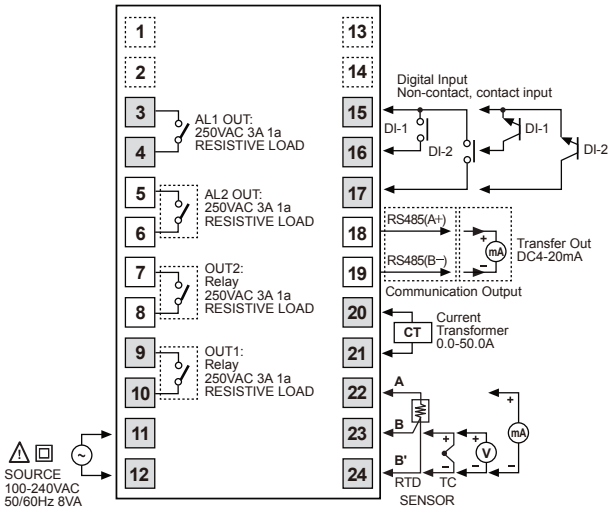

※Digital input is not electrically insulated from internal circuits, so it should be insulated when connecting other circuits. (Photocoupler, Relay, Independent switch)

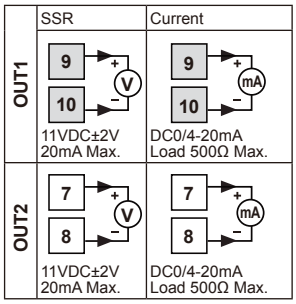

Economical dual display type, PID control [TCN Series]

■ Ordering information

T | CN | 4 | S — 2 | 4 | R

Control output	R	Relay contact output+SSRP output (AC power)
		Relay contact output+SSR output (AC/DC power)
Power supply	2	24VAC 50/60Hz, 24-48VDC
	4	100-240VAC 50/60Hz
Auxiliary output	2	Alarm1+Alarm2 output
Size	S	DIN W48×H48mm
	M	DIN W72×H72mm
	H	DIN W48×H96mm
	L	DIN W96×H96mm
Digit	4	9999(4digit)
Setting type	CN	Dual display type, set by touch switch
Item	T	Temperature controller

■ Specifications

Series		TCN4S	TCN4M	TCN4H	TCN4L
Appearances & Dimensions		NEW [W48×H48×L65㎜]	NEW [W72×H72×L65㎜]	NEW [W48×H96×L65㎜]	NEW [W96×H96×L65㎜]
Power supply	AC power	100-240VAC 50/60Hz			
	AC/DC power	24VAC 50/60Hz, 24-48VDC			
Allowable voltage range		90 to 110% of rated voltage			
Power consumption	AC power	Max. 5VA(100-240VAC 50/60Hz)			
	AC/DC power	Max. 5VA(24VAC 50/60Hz), Max. 3W(24-48VDC)			
Display method		7 Segment (PV: red, SV: green), Other display(green, red) LED			
Character size	PV(W×H)	7.0×15.0mm	9.5×20.0mm	7.0×14.6mm	11.0×22.0mm
	SV(W×H)	5.0×9.5mm	7.5×15.0mm	6.0×12.0mm	7.0×14.0mm
Input type	RTD	DPt100Ω, Cu50Ω (allowable line resistance max. 5Ω per a wire)			
	Thermocouple	K(CA), J(IC), L(IC), T(CC), R(PR), S(PR)			
Display accuracy※1	RTD	• At room temperature (23℃ ±5℃): (PV ±0.5% or ±1℃, select the higher one) ±1digit • Out of room temperature range: (PV ±0.5% or ±2℃, select the higher one) ±1digit			
	Thermocouple				
Control output	Relay	250VAC 3A 1a			
	SSR	12VDC ±2V 20mA Max.			
Alarm output		AL1, AL2 Relay output: 250VAC 1A 1a			
Control method		ON/OFF control, P, PI, PD, PID control			
Hysteresis		1 to 100℃/℉ (0.1 to 50.0℃/℉) variable			

※1: ◎ At room temperature (23℃ ±5℃)
- Thermocouple C R, S type, below 200℃: (PV ±0.5% or ±3℃, select the higher one) ±1digit
- Thermocouple R, S type, over 200℃: (PV ±0.5% or ±2℃, select the higher one) ±1digit
- Thermocouple L(IC) type, RTD Cu50Ω: (PV ±0.5% or ±2℃, select the higher one) ±1digit

◎ Out of room temperature range
- Thermocouple R, S type, below 200℃: (PV ±1.0% or ±6℃, select the higher one) ±1digit
- Thermocouple R, S type, over 200℃: (PV ±0.5% or ±5℃, select the higher one ±1digit
- RTD Cu50Ω: (PV ±0.5% or ±3℃, select the higher one) ±1digit

■ Specifications

Series		TCN4S	TCN4M	TCN4H	TCN4L
Proportional band (P)		0.1 to 999.9℃/℉			
Integral time (I)		0 to 9999 sec.			
Derivative time (D)		0 to 9999 sec.			
Control period (T)		0.5 to 120.0 sec.			
Manual reset		0.0 to 100.0%			
Sampling period		100ms			
Dielectric strength	AC Power	2,000VAC 50/60Hz 1min.(between input terminal and power terminal)			
	AC/DC power	1,000VAC 50/60Hz 1min.(between input terminal and power terminal)			
Vibration		0.75mm amplitude at frequency of 5 to 55Hz in each of X, Y, Z directions for 2 hours			
Relay life cycle	Mechanical	OUT: Over 5,000,000 times, AL1/2: Over 5,000,000 times			
	Electrical	OUT: Over 200,000 times(250VAC 3A resistive load) AL1/2: Over 300,000 times(250VAC 1A resistive load)			
Insulation resistance		Min. 100MΩ(at 500VDC megger)			
Noise resistance		±2kV R-phase, S-phase the square wave noise (pulse width: 1us) by the noise simulator			
Memory retention		Approx. 10 years (when using non-volatile semiconductor memory type)			
Environ-ment	Ambient temperature	-10 to 50℃, storage: -20 to 60℃			
	Ambient humidity	35 to 85%RH, storage: 35 to 85%RH			
Insulation type		Double insulation or reinforced insulation (mark: ⧈, Dielectric strength between the measuring input part and the power part: AC power 2kV, AC/DC Power 1kV)			
Approval		CE c UL us			
Weight※2		Approx. 147g (Approx. 100g)	Approx. 203g (Approx. 133g)	Approx. 194g (Approx. 124g)	Approx. 275g (Approx. 179g)

※2: The weight is with packaging and the weight in parentheses is only unit weight.
※Environment resistance is rated at no freezing or condensation.

■ Connections

※TCN4 Series has selectable control output; Relay output, and SSRP output. AC/DC voltage type has Relay output and SSR output and it is selectable.

● **TCN4S**

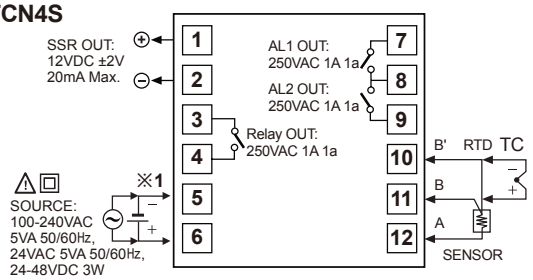

● **TCN4M**

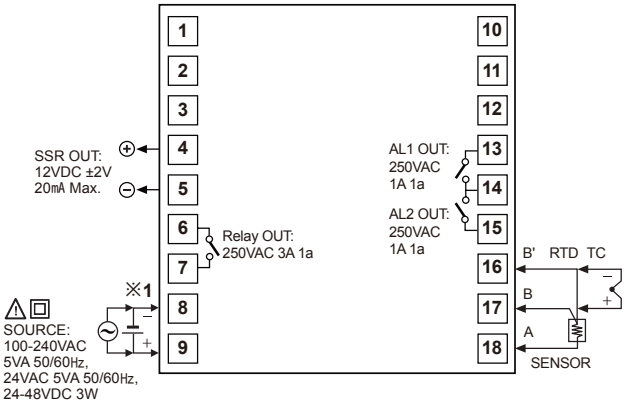

● **TCN4H/L**

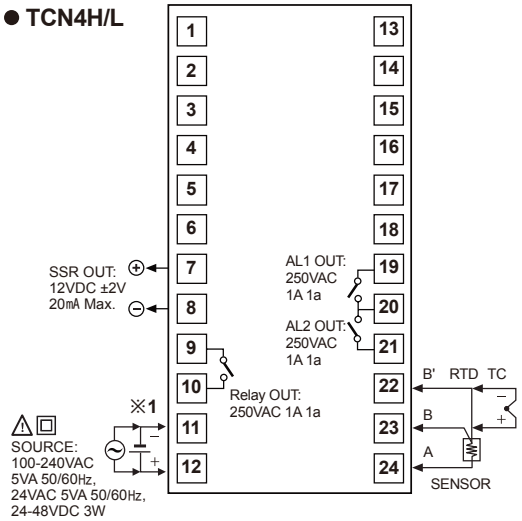

※1: Power supply
- AC power: 100-240VAC 5VA 50/60Hz
- AC/DC power: 24VAC 5VA 50/60Hz, 24-48VDC 3W

Economical single display type, PID control [TC Series]

■ Ordering information

T C 4 S — 1 4 R

Control output	N	Indicator - Without control output
	R	Relay output + SSRP output (AC power) Relay output + SSR output (AC/DC power)
Power supply	2	24-48VDC, 24VAC 50/60Hz
	4	100-240VAC 50/60Hz
Alarm output	N	No alarm output
	1	Alarm1 output
	2	Alarm1 output + Alarm2 output ※1
Size	S	DIN W48×H48mm (Terminal block type)
	SP	DIN W48×H48mm (11pin plug type) ※2
	Y	DIN W72×H36mm
	M	DIN W72×H72mm
	H	DIN W48×H96mm
	W	DIN W96×H48mm
	L	DIN W96×H96mm
Digit	4	9999 (4digit)
Setting type	C	Set by touch switch
Item	T	Temperature controller

※1. It is unavailable for TC4SP, TC4Y.
※2. 11pin socket(PG-11, PS-11) for TC4SP: sold separately.

■ Specifications

Series		TC4S	TC4SP	TC4Y	TC4M	TC4W	TC4H	TC4L
Appearances & Dimensions		Upgrade [W48×H48×L64.5mm]	Upgrade [W48×H48×L72mm]	Upgrade [W72×H36×L77mm]	Upgrade [W72×H72×L64.5mm]	Upgrade [W96×H48×L64.5mm]	Upgrade [W48×H96×L64.5mm]	Upgrade [W96×H96×L64.5mm]
Power supply	AC power	100-240VAC 50/60Hz						
	AC/DC power	24VAC 50/60Hz, 24-48VDC						
Allowable voltage range		90 to 110% of rated voltage						
Power consumption	AC power	Max. 5VA(100-240VAC 50/60Hz)						
	AC/DC power	Max. 5VA(24VAC 50/60Hz), Max. 3W(24-48VDC)						
Display method		7Segment(red), Other display part(green, yellow, red) LED method						
Character size (W×H)		7.0×15.0mm		7.4×15.0mm	9.5×20.0mm	9.5×20.0mm	7.0×14.6mm	11.0×22.0mm
Input type	RTD	DPt100Ω, Cu50Ω(allowable line resistance max. 5Ω per a wire)						
	Thermocouple	K(CA), J(IC), L(IC)						
Display accuracy※1	RTD	• At room temperature(23℃±5℃): (PV ±0.5% or ±1℃, select the higher one) ±1digit • Out of room temperature range: (PV ±0.5% or ±2℃, select the higher one) ±1digit ※In case of TC4SP Series, ±1℃ will be added.						
	Thermocouple							

※1: Thermocouple L(IC) type, RTD Cu50Ω
• At room temperature (23℃ ±5℃): (PV ±0.5% or ±3℃, select the higher one) ±1digit
• Out of room temperature range: (PV ±0.5% or ±4℃, select the higher one) ±1digit
In case of TC4SP Series, ±1℃ will be added.

■ Specifications

Series		TC4S	TC4SP	TC4Y	TC4M	TC4W	TC4H	TC4L
Control output	Relay	250VAC 3A 1a						
	SSR	12VDC ±2V 20mA Max.						
Sub output		AL1, AL2 relay output: 250VAC 1A 1a(※TC4SP, TC4Y have AL1 only.)						
Control method		ON/OFF and P, PI, PD, PID control						
Hysteresis		1 to 100℃/℉ (0.1 to 50.0℃/℉) variable						
Proportional band (P)		0.1 to 999.9℃/℉						
Integral time (I)		0 to 9999 sec.						
Derivative time (D)		0 to 9999 sec.						
Control period (T)		0.5 to 120.0 sec.						
Manual reset		0.0 to 100.0%						
Sampling period		100ms						
Dielectric strength	AC power	2,000VAC 50/60Hz for 1min.(between input terminal and power terminal)						
	AC/DC power	1,000VAC 50/60Hz for 1min.(between input terminal and power terminal)						
Vibration		0.75mm amplitude at frequency of 5 to 55Hz(for 1 min.) in each of X, Y, Z directions for 2 hours						
Relay life cycle	Mechanical	OUT: Over 5,000,000 times, AL1/2: Over 5,000,000 times						
	Electrical	OUT: Over 200,000 times(250VAC 3A resistive load) AL1/2: Over 300,000 times(250VAC 1A resistive load)						
Insulation resistance		Min. 100MΩ(at 500VDC megger)						
Noise resistance		±2kV R-phase, S-phase the square wave noise (pulse width: 1us) by the noise simulator						
Memory retention		Approx. 10 years (when using non-volatile semiconductor memory type)						
Environment	Ambient temperature	-10 to 50℃, storage: -20 to 60℃						
	Ambient humidity	35 to 85%RH, storage: 35 to 85%RH						
Insulation type		Double insulation or reinforced insulation (mark: ⧈, Dielectric strength between the measuring input part and the power part: AC power 2kV, AC/DC Power 1kV)						
Approval		CE c UL us (Except for AC/DC power type)						
Unit weight		Approx. 97g	Approx. 84g	Approx. 127g	Approx. 127g	Approx. 118g	Approx. 118g	Approx. 172g

※Environment resistance is rated at no freezing or condensation.

■ Connections

※TC4 Series has selectable control output; Relay output, and SSRP output. AC/DC power type has Relay output and SSR output and it is selectable.

● TC4S

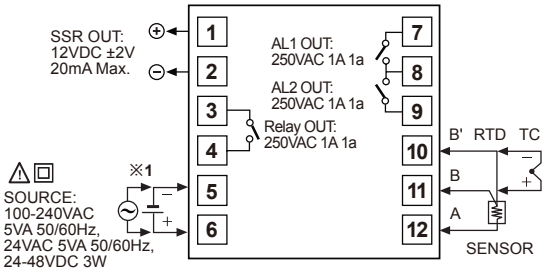

● TC4SP

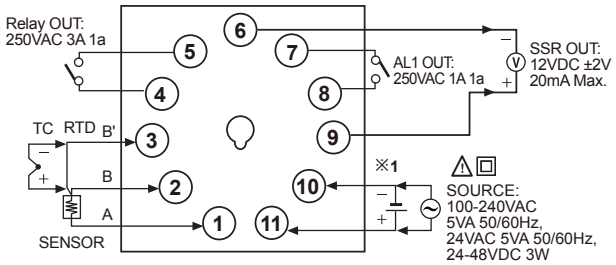

● TC4Y

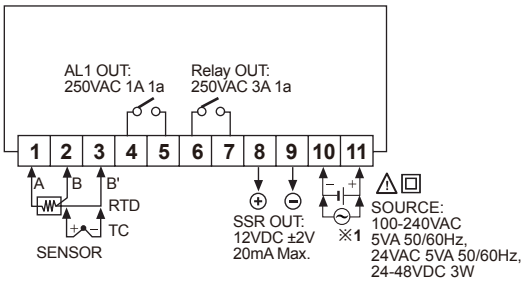

※1: • AC power: 100-240VAC 5VA 50/60Hz
• AC/DC power: 24VAC 5VA 50/60Hz, 24-48VDC 3W

● TC4W

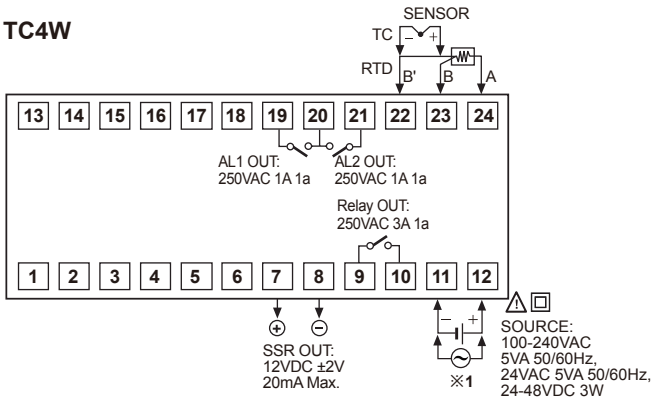

■ Connections

● TC4M

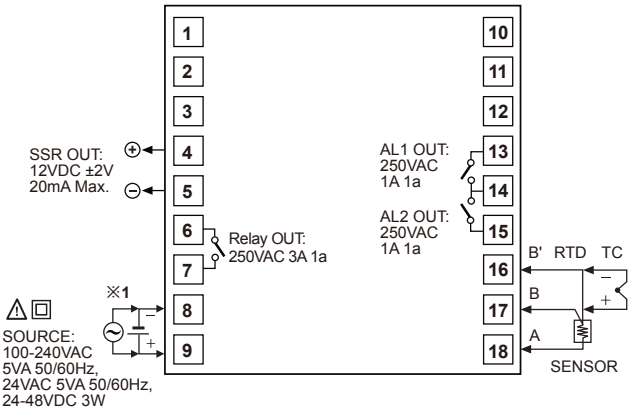

※1: • AC power: 100-240VAC 5VA 50/60Hz
• AC/DC power: 24VAC 5VA 50/60Hz, 24-48VDC 3W

● TC4H/L

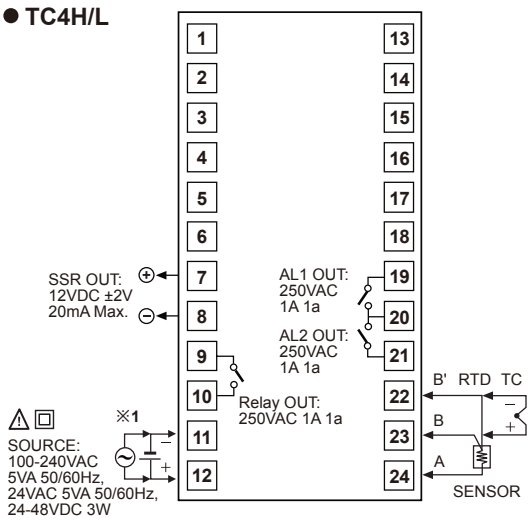

Analog and non-indicating type, PID control, set temperature by dial [TA Series]

■ Ordering information

TA S – B 4 R P 4 C

Unit

C	Celsius ℃
F	Fahrenheit ℉

Temperature range for each sensor

	℃	℉	Temperature sensor		
0	-50 to 100	-58 to 212	Pt	–	–
1	0 to 100	32 to 212	Pt	–	K
2	0 to 200	32 to 392	Pt	J	K
3	0 to 300	32 to 572	–	J	–
4	0 to 400	32 to 752	Pt	J	K
6	0 to 600	32 to 1,112	–	–	K
8	0 to 800	32 to 1,472	–	–	K
C	0 to 1,200	32 to 2,192	–	–	K

Sensor input type

P	DPt100Ω
J	J(IC)
K	K(CA)

Control output

R	Relay output
S	SSR drive voltage output

Power supply

4	100-240VAC 50/60Hz

Control method

B	ON/OFF control & PID control combined

Size

S	DIN W48 x H48mm(8pin plug type)※1
M	DIN W72 x H72mm
L	DIN W96 x H96mm

Item

TA	Analog setting type temperature controller

※1: 8pin socket(PG-08, PS-08) is sold separately.

■ Specifications

Series		TAS	TAM	TAL
Appearances & Dimensions		NEW (pending) [W48×H48×L66.5mm]	NEW (pending) [W72×H72×L64.5mm]	NEW (pending) [W96×H96×L64.5mm]
Power supply		100-240VAC 50/60Hz		
Allowable voltage range		90 to 110% of rated voltage		
Power consumption		Max. 4VA		
Size		DIN W48×H48mm	DIN W72×H72mm	DIN W96×H96mm
Display method		Deviation LED(red, green), Output LED(red)		
Setting type		Dial setting		
Setting accuracy ※1		F.S. ±2% (room temperature 23℃±5℃)		
Input type	RTD	DPt100Ω (allowable line resistance max. 5Ω per a wire)		
	Thermocouples	K(CA), J(IC)		
Control	ON/OFF Control	Hysteresis: 2℃ fixed		
	PID Control	Control period: Relay output - 20 sec. / SSR drive voltage output - 2 sec.		
Control output	Relay	250VAC 3A 1c		
	SSR	12VDC±2V 20mA Max.		
Functions		PV deviation indicatable, Error indicatable		
Dielectric strength		2,000VAC 50/60Hz for 1min.(between input terminal and power terminal)		
Vibration		0.75mm amplitude at frequency of 5 to 55Hz(for 1 min.) in each of X, Y, Z directions for 2 hours		
Relay life cycle	Mechanical	Min. 10,000,000 operations(18,000 operations/hr)		
	Electrical	Min. 100,000 operations(900 operations/hr)		
Insulation resistance		Min. 100MΩ(at 500VDC megger)		
Noise resistance		±2kV R-phase, S-phase the square wave noise (pulse width: 1us) by the noise simulator		
Memory retention		Approx. 10 years (when using non-volatile semiconductor memory type)		
Environ-ment	Ambient temperature	-10 to 50℃, storage: -20 to 60℃		
	Ambient humidity	35 to 85%RH, storage: -35 to 85%RH		
Unit weight		Approx. 65g	Approx. 378g	Approx. 387g

※1: Out of room temperature range: Below 100℃ model is F.S. ±4% , Over 100℃ model is F.S. ±3%
※Environment resistance is rated at no freezing or condensation.

■ Connections

※RTD: DPt100Ω(3-wire type)　※Thermocouple: K(CA), J(IC)

● TAS

(※Socket(PG-08, PS-08) is sold separately)

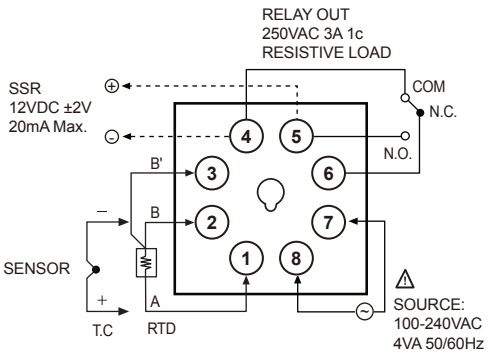

● TAM

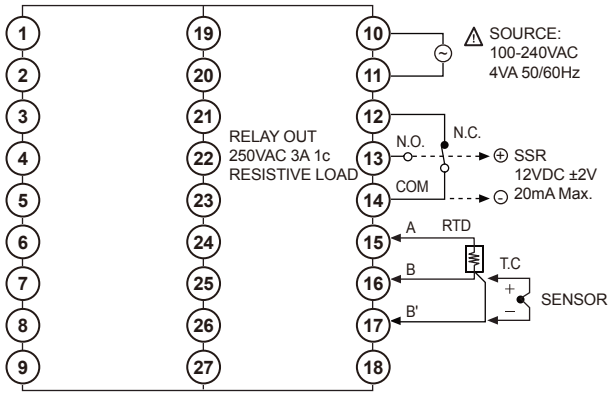

● TAL

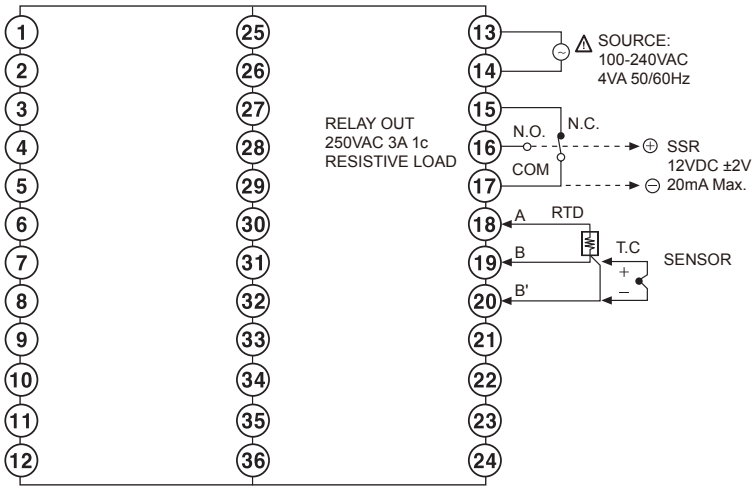

Dual PID auto tuning control [TZN/TZ Series]

■ Ordering information

TZ 4 M — 1 4 R

Control output		R	Relay output
		S	SSR drive voltage output
		C	Current output(DC4-20mA)
Power supply※1		2	24VAC/24-48VDC
		4	100-240VAC 50/60Hz
Auxiliary output	TZ4SP/TZN4S	1	Event 1 output
	TZ4ST	1	Event 1 output
		2	Event 1 + Event 2 output
		R	Event 1 + PV transmission output(DC4-20mA)
	Etc.	1	Event 1 output
		2	Event 1 + Event 2 output
		R	Event 1 + PV transmission output(DC4-20mA)
		A	Event 1 + Event 2 + PV transmission output(DC4-20mA)
		T	Event 1 + RS485 communication output
		B	Event 1 + Event 2+RS485 communication output
Size	TZN4	S	DIN W48×H48mm(terminal type)
	TZ4	SP	DIN W48×H48mm(plug type)
		ST	DIN W48×H48mm(terminal type)
	TZ4/TZN4	M	DIN W72×H72mm
		W	DIN W96×H48mm
		H	DIN W48×H96mm
		L	DIN W96×H96mm
Digit		4	9999(4 digit)
Item		TZ	Temperature dontroller(PID)
		TZN	Temperature dontroller (PID New type)

※1: Only for TZ4SP, TZ4ST, TZ4L, TZN4M Series.

■ Specifications

Series		TZ4SP TZN4S	TZ4ST	TZ4M TZN4M	TZ4W TZN4W	TZ4H TZN4H	TZ4L TZN4L
Appearances & Dimensions		[W48×H48×L95mm] [W48×H48×L90mm]	[W48×H48×L95mm]	[W72×H72×L110mm] [W72×H72×L85mm]	[W96×H48×L110mm] [W96×H48×L100mm]	[W48×H96×L110mm] [W48×H96×L100mm]	[W96×H96×L110mm] [W96×H96×L100mm]
Power supply	AC Power	100-240VAC 50/60Hz					
	AC/DC Power※1	24VAC 50/60Hz / 24-48VDC					
Allowable voltage range		90 to 110% of rated voltage					
Power consumption	AC Power	Max. 5VA(100-240VAC 50/60Hz)		Max. 6VA(100-240VAC 50/60Hz)			
	AC/DC Power※1	Max. 8VA(24VAC 50/60Hz), Max. 7W(24-48VDC)					
Display accuracy		7 Segment (PV: red, SV: green) LED method					
Character size(W×H)		**TZ4SP:** 4.8×7.8mm **TZN4S:** PV:7.8×11.0mm SV:5.8×8.0mm	4.8×7.8mm	**TZ4M:** PV:9.8×14.2mm SV:8.0×10.0mm **TZN4M:** PV:8.0×13.0mm SV:5.0×9.0mm	8.0×10.0mm	**TZ4H:** 3.8×7.6mm **TZN4H:** PV:7.8×11.0mm SV:5.8×8.0mm	PV:9.8×14.2mm SV:8.0×10.0mm
Input type	RTD	DPt100Ω, JPt100Ω, 3wire (allowable line resistance max. 5Ω per a wire)					
	Thermocouple	K(CA), J(IC), R(PR), E(CR), T(CC), S(PR), N(NN), W(TT) (allowable line resistance max. 100Ω)					
	Analog	1-5VDC, 0-10VDC, DC4-20mA					
Control output	Relay	250VAC 3A 1c					
	SSR	12VDC ±3V 30mA Max.					
	Current	DC4-20mA (load 600Ω Max.)					
Sub output	PV transmission	—	DC4-20mA (load 600Ω Max.)				
	EVENT1	250VAC 1A 1a					
	EVENT2	—	250VAC 1A 1a				
	Communication	—	—	RS485(PV/SV transmission, SV setting)			
Control type		ON/OFF, P, PI, PD, PIDF, PIDS control					
Display accuracy		F.S. ±0.3% or 3℃, select the higher one					
Setting method		Front push buttons					
Hysteresis		1~100℃(0.1 to 100.0℃) variable(ON/OFF control)					
ALARM output		Adjustable ON/OFF 1 to 100 (0.1 to 100.0)℃ of alarm output					
Proportional band (P)		0.0 to 100.0%					
Integral time (I)		0 to 3600 sec.					
Derivative time (D)		0 to 3600 sec.					
Control period (T)		1 to 120 sec.					
Sampling period		0.5 sec.					
LBA setting		1 to 999 sec.					
RAMP setting		Ramp Up, Ramp Down at 1 to 99min.					
Dielectric strength		2,000VAC 50/60Hz for 1min. (between power source terminal and input terminal)					

※1. AC/DC power type is only for TZ4SP, TZ4ST, TZN4M, TZ4L Series.

Series		TZ4SP TZN4S	TZ4ST	TZ4M TZN4M	TZ4W TZN4W	TZ4H TZN4H	TZ4L TZN4L
Vibration		0.75mm amplitude at frequency of 10 to 55Hz(for 1min.) in each of X, Y, Z direction for 2 hours					
Relay life cycle	Main output	Mechanical: Min. 10,000,000 operations, Electrical: Min. 100,000 operations(250VAC 3A resistive load)					
	Sub output	Mechanical: Min. 20,000,000 operations, Electrical: Min. 500,000 operations(250VAC 1A resistive load)					
Insulation resistance		Min. 100MΩ (at 500VDC megger)					
Noise resistance		±2kV the square wave noise (pulse width: 1us) by the noise simulator					
Memory retention		Approx. 10 years (when using non-volatile semiconductor memory type)					
Environ-ment	Ambient temperature	-10 to 50℃, storage: -20 to 60℃					
	Ambient humidity	35 to 85%RH, storage: 35 to 85%RH					
Approval		CE c UL us					
Unit weight		**TZ4SP:** Approx. 136g **TZN4S:** Approx. 150g	Approx. 136g	Approx. 270g	**TZ4W:** Approx. 270g **TZN4W:** Approx. 259g	Approx. 259g	Approx. 360g

※Environment resistance is rated at no freezing or condensation.

■ Connections

※RTD: DPt100Ω(3-wire type), JPt100Ω(3-wire type) ※T.C(Thermocouple): K, J, R, E, T, S, W, N
※In case of Analog input, please use T.C(Thermocouple) terminal and be careful about polarity.

● TZN4S

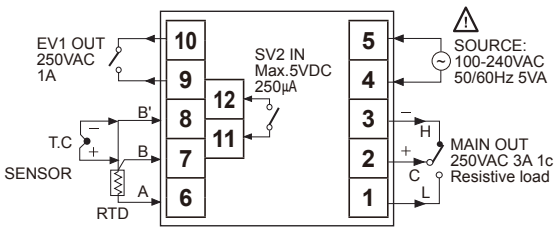

MAIN OUT	
SSR	Current
12VDC ±3V 30mA Max.	DC4-20mA Load 600Ω Max.

● TZN4M

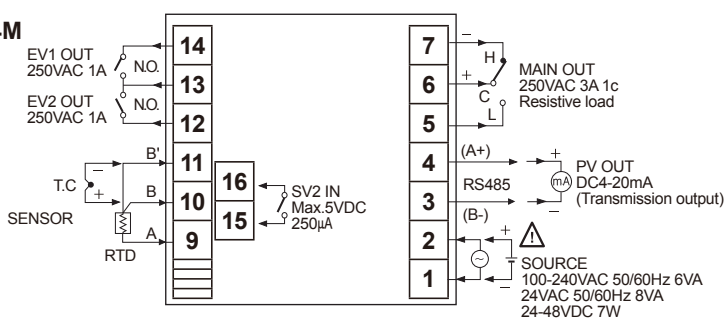

MAIN OUT	
SSR	Current
12VDC ±3V 30mA Max.	DC4-20mA Load 600Ω Max.

● TZ4SP

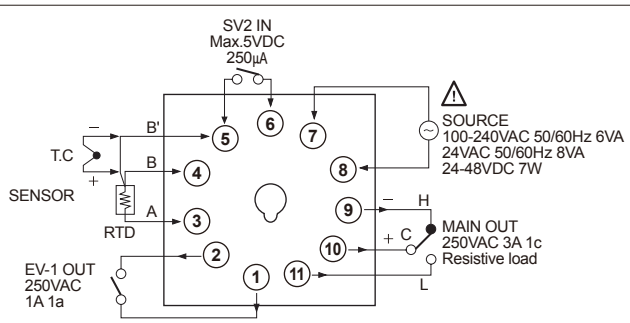

MAIN OUT	
SSR	Current
12VDC ±3V 30mA Max.	DC4-20mA Load 600Ω Max.

● TZ4ST

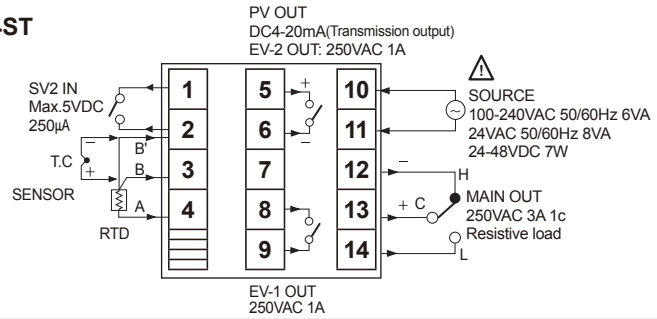

MAIN OUT		SUB OUT
SSR	Current	PV transmission output
12VDC ±3V 30mA Max.	DC4-20mA Load 600Ω Max.	DC4-20mA Load 600Ω Max.

● TZ4M

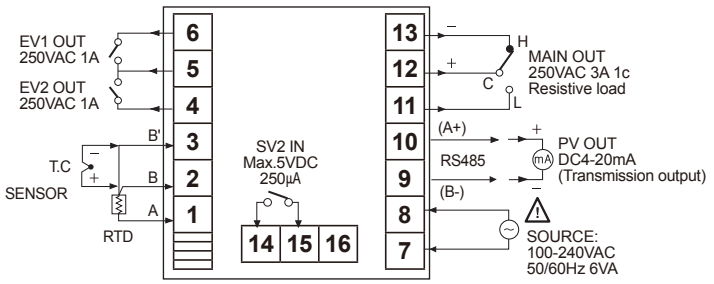

MAIN OUT	
SSR	Current
12VDC ±3V 30mA Max.	DC4-20mA Load 600Ω Max.

● TZ4W/TZN4W

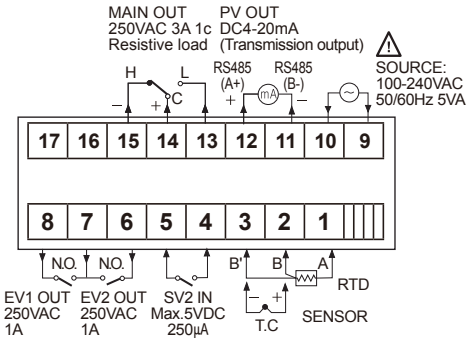

MAIN OUT	
SSR	Current
12VDC ±3V 30mA Max.	DC4-20mA Load 600Ω Max.

● TZ4H / TZN4H

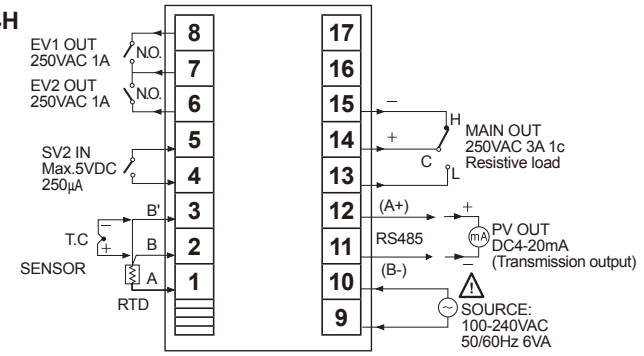

MAIN OUT	
SSR	Current
12VDC ±3V 30mA Max.	DC4-20mA Load 600Ω Max.

● TZ4L / TZN4L

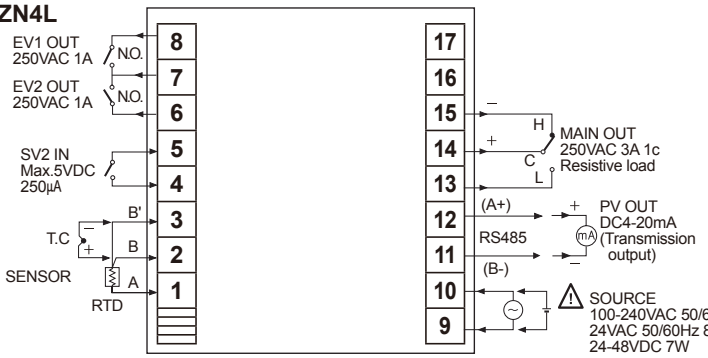

MAIN OUT	
SSR	Current
12VDC ±3V 30mA Max.	DC4-20mA Load 600Ω Max.

Digital switch setting type [T3S,T3H,T4M,T4L Series]

■ Ordering information

T 3 S — B 4 R P 4 C

Unit	C	℃
	F	℉
Temperature range	0	-99 to 199, -99.9 to 199.9
	1	0 to 99.9
	2	0 to 199
	4	0 to 399
	8	0 to 799
	A	0 to 999
	C	0 to 1200
	F	600 to 1600
Sensor input type	P	DPt100Ω
	J	J(IC)
	K	K(CA)
	R	R(PR)
Control output	R	Relay output
	S	SSR drive voltage output
	C	Current outut(DC4-20mA)
Power supply	3	110/220VAC 50/60Hz
	4	100-240VAC 50/60Hz
Control method	B	ON/OFF, P control
Size	S	DIN W48×H48mm
	H	DIN W48×H96mm
	M	DIN W72×H72mm
	L	DIN W96×H96mm
Digit	3	999(3digit)
	4	9999(4digit)
Item	T	Temperature Controller

※**Refer to the sensor temperature range for selection.**

■ Temperature range for each sensor

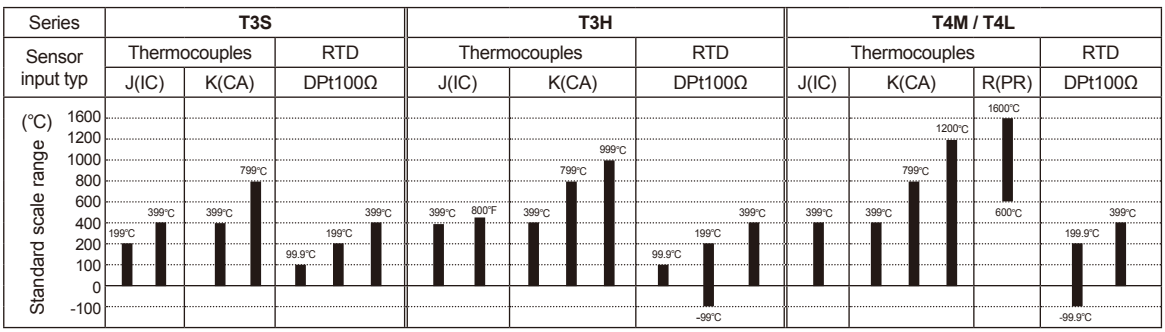

※In case input sensor is R(PR) type, it is not available to perform correct control under 600℃.

■ Specifications

Series		T3S	T3H	T4M	T4L
Appearances & Dimensions		[W48×H48×L88mm]	[W48×H96×L134mm]	[W72×H72×L112mm]	[W96×H96×L100mm]
Power supply		100-240VAC 50/60Hz	110/220VAC 50/60Hz		
Allowable voltage range		90 to 110% of power supply			
Power consumption		Max. 5VA	Max. 3VA		
Display method		7 Segment(red) LED method			
Character size(W×H)		4.0×8.0mm	6.0×10.0mm	7.2×9.8mm	9.5×14.2mm
Display accuracy		F.S. ±1% rdg ±1digit	F.S. ±0.5% rdg ±1digit		
Setting type		Digital setting			
Setting accuracy		F.S. ±1%	F.S. ±0.5%		
Sensor input		Thermocouples: K(CA), J(IC), R(PR) / RTD: DPt100Ω ※There is no R(PR) in T3S, T3H Series.			
Input line resistance		Thermocouples: Max. 100Ω / RTD: Allowable line resistance max. 5Ω per a wire			
Control method	ON/OFF control	Hysteresis: F.S. 0.5% ±0.2% fixed	Hysteresis: F.S. 0.2 to 3% variable		
	P control	Proportional band: F.S. ±3% fixed Period: 20sec. fixed	Proportional band: F.S. 1 to 10% variable, Period: 20sec. fixed		
RESET adjuster range		F.S. ±3% variable(revision of control deviation)			
Control output		• Relay output : 250VAC 2A 1c • SSR drive voltage output : 12VDC ±3V 20mA Max. • Current output : DC4-20mA (load 600Ω Max.)	• Relay output: 250VAC 3A 1c • SSR output: 24VDC ±3V 20mA Max. • Current output: DC4-20mA (load 600Ω Max.)		
Self-diagnosis		Built-in burn out function (cut off output when sensor is disconnected)			
Insulation resistance		Min. 100MΩ (at 500VDC megger)			
Dielectric strength		2,000VAC 50/60Hz for 1 min.			
Noise resistance		±1kV the square wave noise(pulse width: 1μs) by the noise simulator			
Vibration	Mechanical	0.75mm amplitude at frequency of 10 to 55Hz(for 1 min.) in each of X, Y, Z directions for 1 hour			
	Malfunction	0.5mm amplitude at frequency of 10 to 55Hz(for 1 min.) in each of X, Y, Z directions for 10 min.			
Shock	Mechanical	300m/s²(approx. 30G) in each of X, Y, Z directions for 3 times			
	Malfunction	100m/s²(approx. 10G) in each of X, Y, Z directions for 3 times			
Relay life cycle	Mechanical	Min. 10,000,000 operations			
	Electrical	Min. 100,000 operations(250VAC 3A at resistive load)			
Environ-ment	Ambient temperature	-10 to 50℃, storage:-25 to 65℃			
	Ambient humidity	35 to 85%RH, storage: 35 to 85%RH			
Unit weight		Approx. 196g	Approx. 496g	Approx. 399g	Approx. 468g

※F.S. is same with sensor measuring temperature range.
Ex) In case of measurement temperature range is from -99.9 to 199.9℃, Full scale is 299.8.
※Environment resistance is rated at no freezing or condensation.

▣ Connections

※RTD: DPt100Ω (3-wire type) ※Thermocouple: K, J, R

● T3S

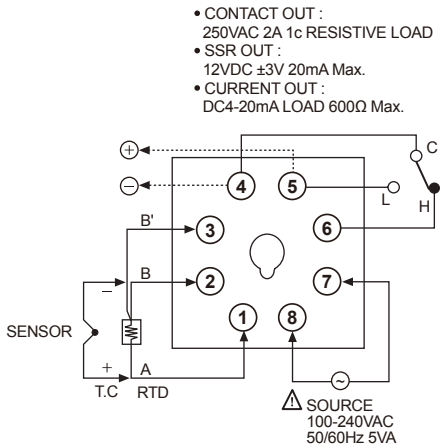

● T4M

※Although T4M has an alarm terminal, it does not work since it uses the same case with T4MA.

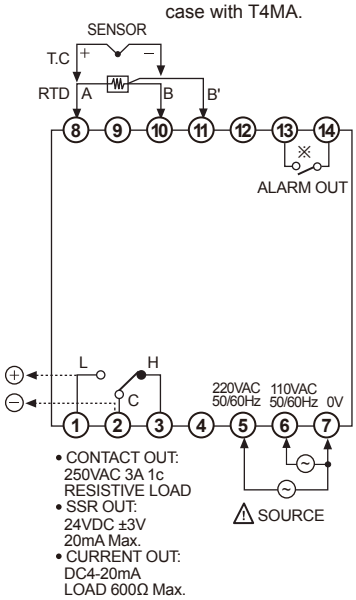

● T3H

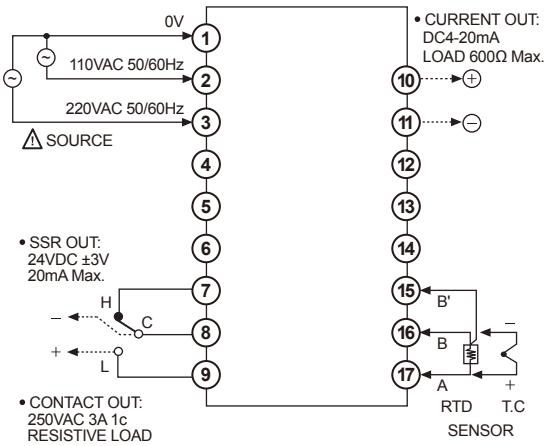

● T4L

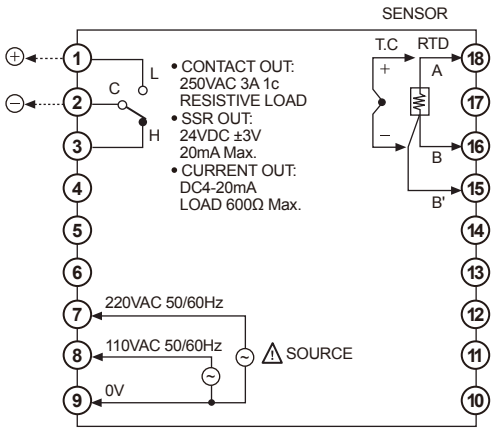

ALARM, Sub-output type [T3HS,T3HA,T4MA,T4LA Series]

■ Ordering information

T 3 H A — B 3 R P 4 C

Unit	C	℃
Temperature range	0	-99 to 199, -99.9 to 199.9
	4	0 to 399
	8	0 to 799
	A	0 to 999
	C	0 to 1200
	F	600 to 1600
Sensor input type	P	DPt100Ω
	J	J(IC)
	K	K(CA)
	R	R(PR)
Control output	R	Relay output
	S	SSR drive voltage output
	C	Current output(DC4-20mA)
Power supply	3	110/220VAC 50/60Hz
Control method	B	ON/OFF, P control
Alarm/Sub output mode	A	Alarm output(High·Low)
	S	SUB output
Size	H	DIN W48×H96mm
	M	DIN W72×H72mm
	L	DIN W96×H96mm
Digit	3	999(3digit)
	4	9999(4digit)
Item	T	Temperature Controller

※**Refer to the sensor temperature range for selection.**

■ Temperature range for each sensor

Series	T3HA			T3HS			T4MA / T4LA			
Sensor input typ	Thermocouples		RTD	Thermocouples		RTD	Thermocouples			RTD
	J(IC)	K(CA)	DPt100Ω	J(IC)	K(CA)	DPt100Ω	J(IC)	K(CA)	R(PR)	DPt100Ω

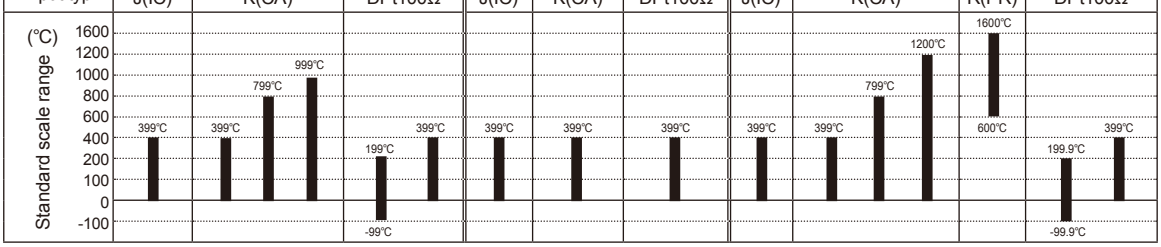

※In case input sensor is R(PR) type, it is not available to perform correct control under 600℃.

■ Specifications

Series		T3HA	T3HS	T4MA	T4LA
Appearances & Dimensions		[W48×H96×L134㎜]	※SUB output type [W48×H96×L134㎜]	[W72×H72×L112㎜]	[W96×H96×L110㎜]
Power supply		110/220VAC 50/60Hz			
Allowable voltage range		90 to 110% of rated voltage			
Power consumption		Max. 3VA			
Display method		7 Segment(red) LED method			
Character size(W×H)		6.0×10.0mm		7.2×9.8mm	9.5×14.2mm
Display accuracy		F.S. ±0.5% rdg ±1digit			
Setting type		Digital setting			
Setting accuracy		F.S. ±0.5%			
Sensor input		Thermocouples: K(CA), J(IC), R(PR) / RTD: DPt100Ω ※There is no R(PR) in T3HA, T3HS Series.			
Input line resistance		Thermocouples: Max. 100Ω, RTD: Allowable line resistance max. 5Ω per a wire			
Control	ON/OFF control	Hysteresis: F.S. 0.2 to 3% variable			
	P control	Proportional band: F.S. 1 to 10% variable, Period: 20sec. fixed			
Alarm output	SUB	SUB: 0 to -50℃ variable			
	Alarm	ALARM width F.S. 0 to 10% variable			
RESET adjuster range		F.S. ±3% variable (revision of control deviation / only for P control)			
Control output		• Relay contact output: 250VAC 3A 1c • SSR drive voltage output: 24VDC ±3V 20mA Max. • Current output: DC4-20mA (load 600Ω Max.)			
		ALARM OUT: 250VAC 1A 1a	SUB OUT: 250VAC 1A 1a	ALARM OUT: 250VAC 1A 1a	ALARM OUT: 250VAC 1A 1c
Self-diagnosis		Built-in burn out function (cut off output when sensor is disconnected)			
Insulation resistance		Min. 100MΩ (at 500VDC megger)			
Dielectric strength		2,000VAC 50/60Hz for 1 min.			
Noise resistance		±1kV the square wave noise(pulse width: 1㎲) by the noise simulator			
Vibration	Mechanical	0.75mm amplitude at frequency of 10 to 55Hz (for 1 min.) in each of X, Y, Z directions for 1 hour			
	Malfunction	0.5mm amplitude at frequency of 10 to 55Hz (for 1 min.) in each of X, Y, Z directions for 10 min.			
Shock	Mechanical	300m/s²(approx. 30G) in each of X, Y, Z directions for 3 times			
	Malfunction	100m/s²(approx. 10G) in each of X, Y, Z directions for 3 times			
Relay life cycle	Mechanical	Min. 10,000,000 operations			
	Electrical	Min. 100,000 operations(250VAC 3A at resistive load)			
Environ-ment	Ambient temperature	-10 to 50℃, storage: -25 to 65℃			
	Ambient humidity	35 to 85%RH, storage: 35 to 85%RH			
Unit weight		Approx. 514g	Approx. 517g	Approx. 425g	Approx. 484g

※F.S. is same with sensor measuring temperature range.
Ex) In case of using temperature is from -99.9 to 199.9℃, Full scale is 299.8.
※Environment resistance is rated at no freezing or condensation.

▣ Connections

※RTD: DPt100Ω(3-wire type)　※Thermocouple: K, J, R

● T3HA, T3HS

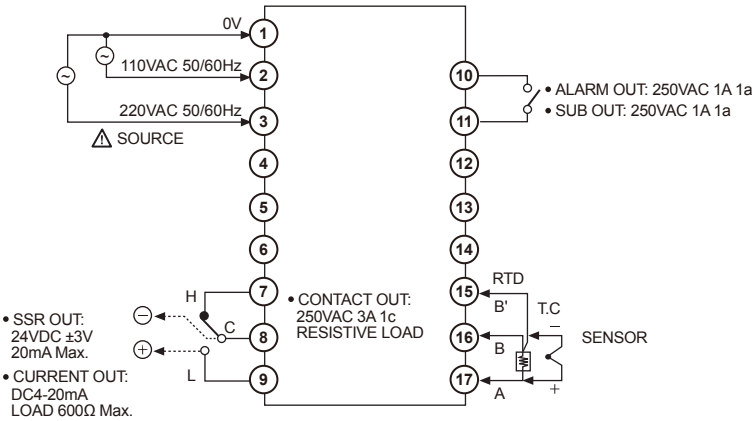

● T4MA

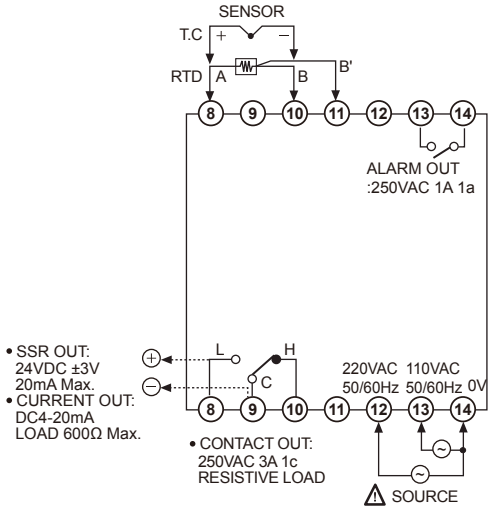

● T4LA

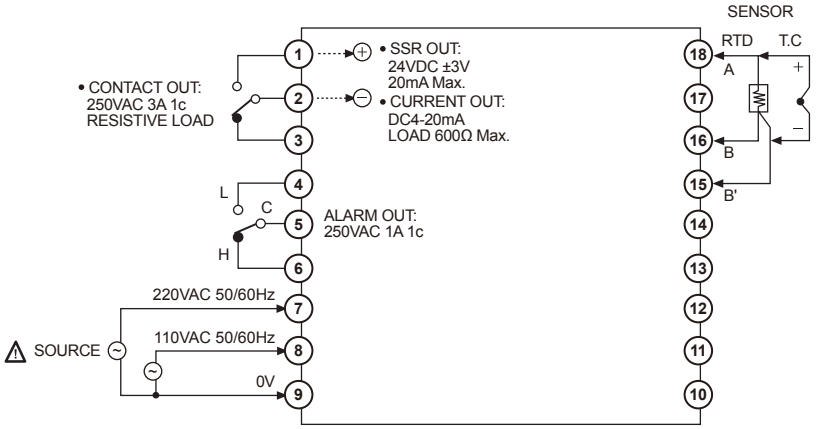

Dual setting type, High accuracy [T4LP Series]

■ Ordering information

T 4 L P – B 3 R P 4 C

Unit	C	℃
Temperature range	2	0 to 199.9
	4	0 to 399
	8	0 to 799
	C	0 to 1200
	F	600 to 1600
Sensor input type	P	DPt100Ω
	J	J(IC)
	K	K(CA)
	R	R(PR)
Control output	R	Relay output
	S	SSR drive voltage output
	C	Current output(DC4-20mA)
Power supply	3	110/220VAC 50/60Hz
Control method	B	ON/OFF, P control
Sub output mode	P	Dual output
Size	L	DIN W96×H96mm
Digit	4	9999(4digit)
Item	T	Temperature Controller

※**Refer to the sensor temperature range for selection.**

■ Connections

※RTD: DPt100Ω(3-wire type)　※Thermocouple: K, J, R

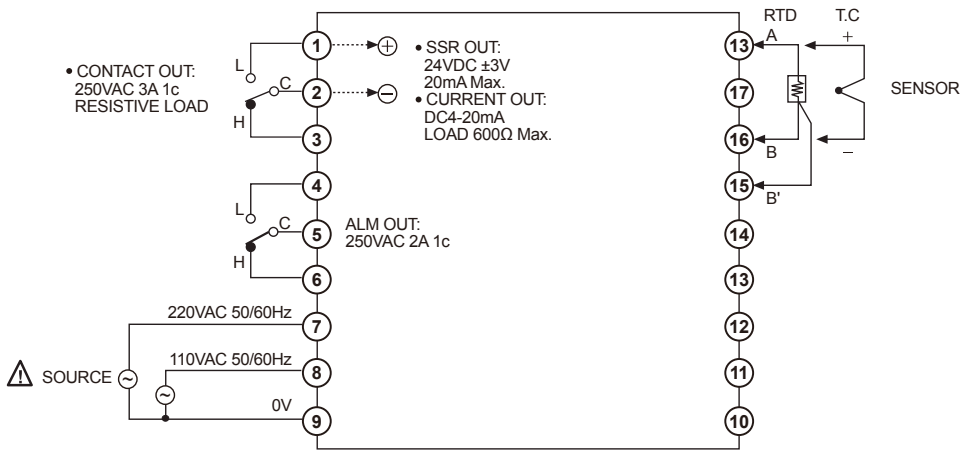

■ Specifications

Series		T4LP
Appearances & Dimensions		※Dual setting type [W96×H96×L110㎜]
Power supply		110/220VAC 50/60Hz
Allowable voltage range		90 to 110% of rated voltage
Power consumption		Max. 3VA
Display method		7 Segment(red) LED method
Character size(W×H)		9.5×14.2mm
Display accuracy		F.S. ±0.5% rdg ±1digit
Setting type		Digital setting
Setting accuracy		F.S. ±0.5%
Sensor input		Thermocouples: K(CA), J(IC), R(PR) / RTD: DPt100Ω
Input line resistance		Thermocouples: Max. 100Ω, RTD: Allowable line resistance max. 5Ω per a wire
Control method	ON/OFF control	Hysteresis: F.S. 0.2 to 3% variable
	P control	Proportional band: F.S. 1 to 10%, Period: 20sec. fixed
RESET adjuster range		F.S. ±3% variable (revision of control deviation / only for P control)
Control output		• Relay contact output: 1st out: 250VAC 3A 1c, 2nd out: 250VAC 2A 1c • SSR drive voltage output: 24VDC ±3V 20mA Max. • Current output: DC4-20mA (load 600Ω Max.)
Self-diagnosis		Built-in burn out function (cut off output when sensor is disconnected)
Insulation resistance		Min. 100MΩ(at 500VDC megger)
Dielectric strength		2,000VAC 50/60Hz for 1 min.
Noise resistance		±2kV the square wave noise(pulse width:1μs) by the noise simulator
Vibration	Mechanical	0.75mm amplitude at frequency of 10 to 55Hz(for 1 min.) in each of X, Y, Z directions for 1 hour
	Malfunction	0.5mm amplitude at frequency of 10 to 55Hz(for 1 min.) in each of X, Y, Z directions for 10 min.
Shock	Mechanical	300m/s²(approx. 30G) in each of X, Y, Z directions for 3 times
	Malfunction	100m/s²(approx. 10G) in each of X, Y, Z directions for 3 times
Relay life cycle	Mechanical	Min. 10,000,000 operations
	Electrical	Min. 100,000 operations(250VAC 3A at resistive load)
Environ-ment	Ambient temperature	-10 to 50℃, storage: -25 to 65℃
	Ambient humidity	35 to 85%RH, storage: 35 to 85%RH
Unit weight		Approx. 487g

※F.S. is same with sensor measuring temperature range.
Ex) In case of using temperature is from 600 to 1600℃, Full scale is 1000.
※Environment resistance is rated at no freezing or condensation.

■ Temperature range for each sensor

Series	T4LP			
Sensor input type	Thermocouples			RTD
	J(IC)	K(CA)	R(PR)	DPt100Ω

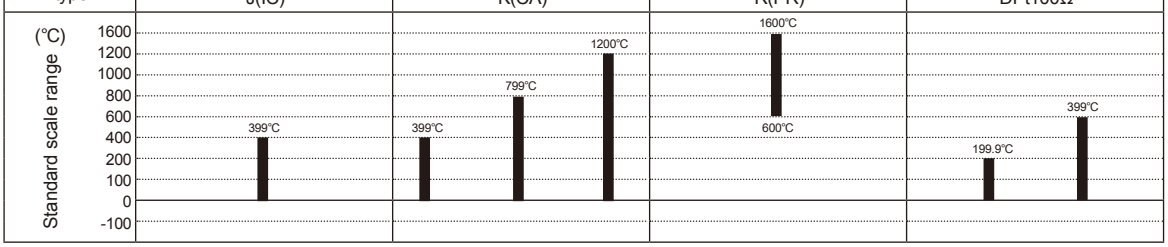

※In case, the sensor is R(PR) type, it is not available to indicate the temperature and control correctly.

Indication type only, Various sizes [T3NI,T4YI,T4WI,T3SI,T3HI,T4MI,T4L Seires]

■ Ordering information

T 3 S I — N 4 N P 4 C

Unit	C	℃
Temperature range	0	-99 to 199, -99.9 to 199.9, -99.9 to 99.9
	1	0 to 99.9
	2	0 to 199
	4	0 to 399
	5	0 to 500
	8	0 to 799
	A	0 to 999
	C	0 to 1200
	F	600 to 1600
Sensor input type	P	DPt100Ω
	J	J(IC)
	K	K(CA)
	R	R(PR)
Control output	N	No output
Power supply	X	12-24VDC
	3	110/220VAC 50/60Hz
	4	110-240VAC 50/60Hz
Control method	N	No control function
Sub output mode	I	Indicator Type
Size	N	DIN W48×H24mm
	Y	DIN W72×H36mm
	W	DIN W96×H48mm
	S	DIN W48×H48mm
	H	DIN W48×H96mm
	M	DIN W72×H72mm
	L	DIN W96×H96mm
Digit	3	999(3digit)
	4	9999(4digit)
Item	T	Temperature Controller

※Refer to the sensor temperature range for selection.

■ Temperature range for each sensor

Series	T3NI	T4YI / T4WI		
Sensor input type	RTD	Thermocouples		RTD
	DPt100Ω	J(IC)	K(CA)	DPt100Ω

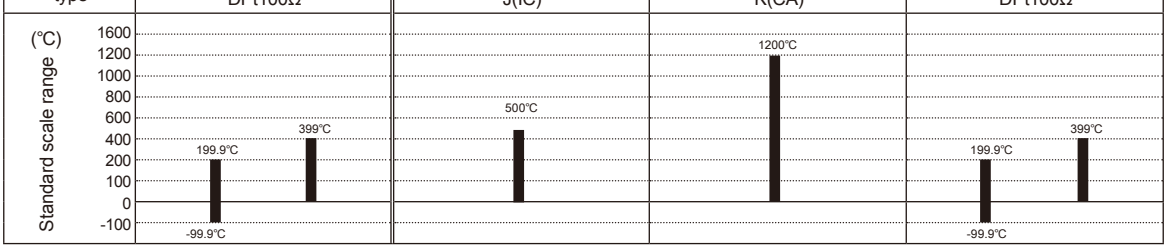

■ Temperature range for each sensor

Series	T3SI			T3HI			T4MI / T4LI			
Sensor input type	Thermocouples		RTD	Thermocouples		RTD	Thermocouples			RTD
	J(IC)	K(CA)	DPt100Ω	J(IC)	K(CA)	DPt100Ω	J(IC)	K(CA)	R(PR)	DPt100Ω

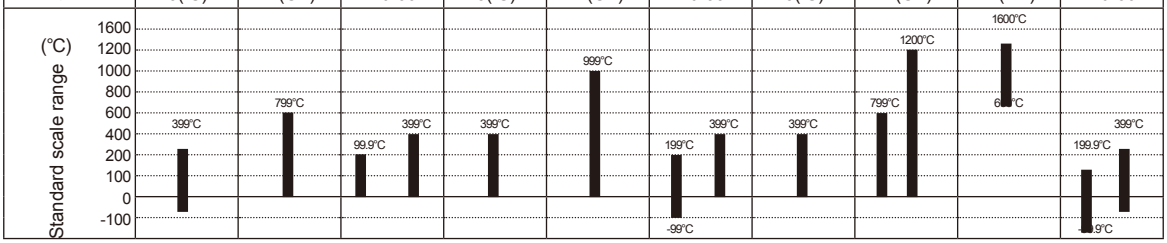

※In case input sensor is R(PR) type, it is not available to perform correct control under 600°C.

■ Specifications

Series		T3NI	T4YI	T4WI	T3SI	T3HI	T4MI	T4LI
Appearances & Dimensions		[W48×H24×L48mm]	[W72×H36×L93mm]	[W96×H48×L99.6mm]	[W48×H48×L88mm]	[W48×H96×L134mm]	[W72×H72×L112mm]	[W96×H96×L100mm]
Power supply		12-24VDC	100-240VAC 50/60Hz	110-220VAC 50/60Hz	100/240VAC 50/60Hz	110/220VAC 50/60Hz		
Allowable voltage range		90 to 110% of rated voltage						
Power consumption		Max. 2W	Max. 3VA					
Display method		7 Segment(red) LED method						
Character size(W×H)		5.0×8.0mm	9.8×14.2mm		4.0×8.0mm	6.0×10.0mm	7.2×9.8mm	9.5×14.2mm
Display accuracy		F.S. ±0.3% rdg ±1digit	F.S. ±0.5% rdg ±1digit					
Sensor input		DPt100Ω	Thermocouples(T.C): K(CA), J(IC), R(PR) / RTD: DPt100Ω ※There is no R(PR) in T4MI, T4LI Series.					
Input line resistance		Allowable line resistance max. 5Ω per a wire	Thermocouples: Max. 100Ω / RTD: Allowable line resistance max. 5Ω per a wire					
Insulation resistance		Min. 100MΩ(at 500VDC megger)						
Dielectric strength		2,000VAC 50/60Hz for 1 min.						
Noise resistance		±500V	±1kV the square wave noise(pulse width: 1μs) by the noise simulator					
Vibration	Mechanical	0.75mm amplitude at frequency of 10 to 55Hz(for 1 min.) in each of X, Y, Z directions for 1 hour						
	Malfunction	0.5mm amplitude at frequency of 10 to 55Hz(for 1 min.) in each of X, Y, Z directions for 10 min.						
Shock	Mechanical	300m/s²(approx. 30G) in each of X, Y, Z directions for 3 times						
	Malfunction	100m/s²(approx. 10G) in each of X, Y, Z directions for 3 times						
Environ-ment	Ambient temperature	-10 to 50°C, storage: -25 to 65°C						
	Ambient humidity	35 to 85%RH, storage: 35 to 85%RH						
Unit weight		Approx. 34g	Approx. 170g	Approx. 322g	Approx. 107g	Approx. 368g	Approx. 356g	Approx. 433g

※F.S. is same with sensor measuring temperature range.
Ex) In case of using temperature is from -99.9 to 199.9°C, Full scale is 299.8.
※Environment resistance is rated at no freezing or condensation.

■ Connections

※RTD: DPt100Ω(3-wire type)　※Thermocouple: K, J, R

● T3NI

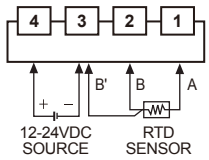

● T4YI

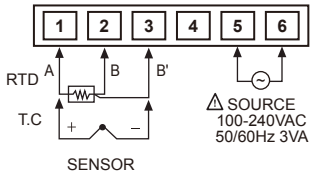

● T4WI

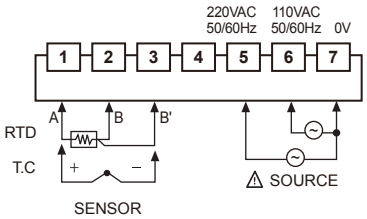

● T3SI

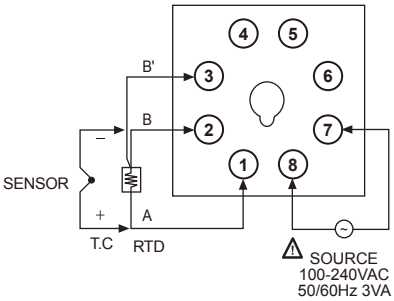

● T4MI

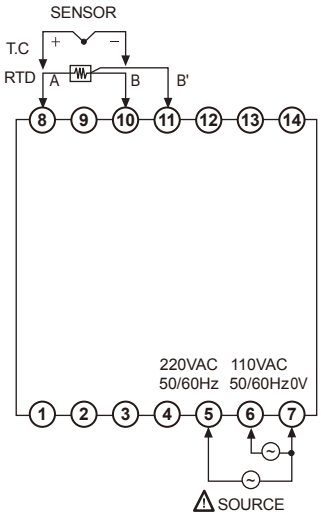

● T3HI

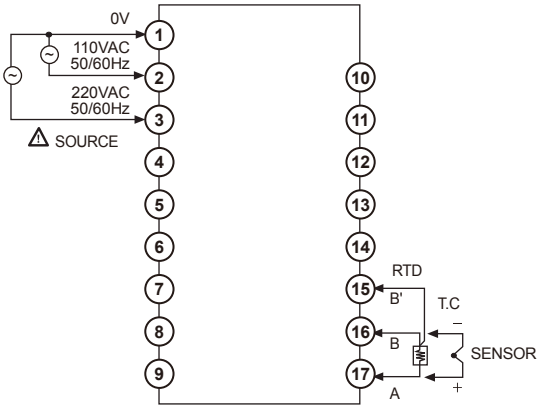

● T4LI

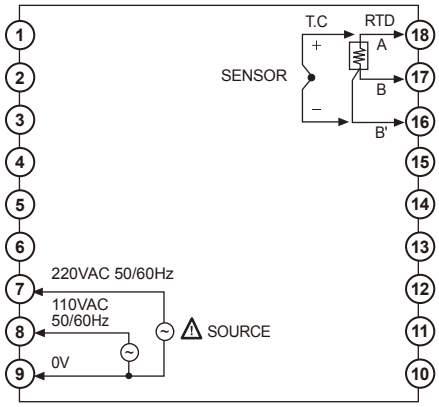

Analog and non-indicating type, set temperature by dial [TOS,TOM,TOL Series]

■ Ordering information

T O S B 4 R P 4 C

Unit	C	℃
	F	℉
Temperature range	X	0 to 60
	1	0 to 100
	2	0 to 200
	3	0 to 300
	4	0 to 400
	6	0 to 600
	8	0 to 800
	A	0 to 1000
	C	0 to 1200
Sensor input type	P	DPt100Ω
	J	J(IC)
	K	K(CA)
Control output	R	Relay output
	S	SSR drive voltage output
Power supply	3	110/220VAC 50/60Hz
	4	100-240VAC 50/60Hz
Control method	P	Proportional control
	F	ON/OFF control
	B	ON/OFF, P control
Size	S	DIN W48×H48mm
	M	DIN W72×H72mm
	L	DIN W96×H96mm
Digit	O	Non-indicating
Item	T	Temperature Controller

※**Refer to the sensor temperature range for selection.**

■ Temperature range for each sensor

Series	TOS / TOM / TOL		
Sensor input type	Thermocouples		RTD
	J(IC)	K(CA)	DPt100Ω

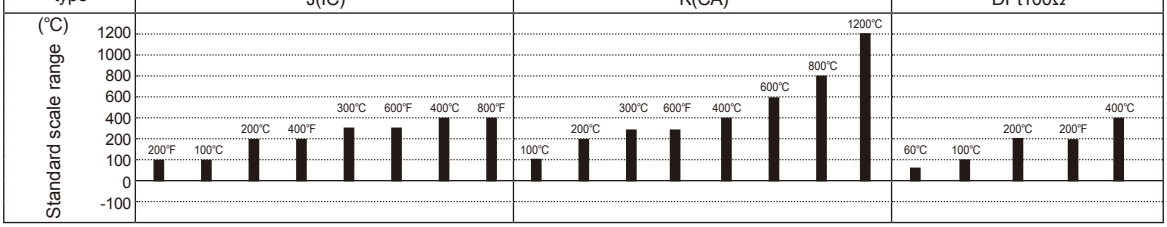

■ Specifications

Series		TOS	TOM	TOL
Appearances & Dimensions		[W48×H48×L79mm]	[W72×H72×L112mm]	[W96×H96×L100mm]
Power supply		100-240VAC 50/60Hz	110/220VAC 50/60Hz	
Allowable voltage range		90 to 110% of rated voltage		
Power consumption		Max. 2.2VA	Max.3VA	
Display method		LED ON	LED ON/OFF	
Setting type		Dial setting		
Setting accuracy		F.S. ±2%		
Sensor input		Thermocouples: K(CA), J(IC) / RTD: DPt100Ω		
Input line resistance		Thermocouples: Max. 100Ω, RTD: Allowable line resistance max. 5Ω per a wire		
Control method	ON/OFF	Hysteresis: F.S. 0.5% ±0.2% fixed		
	Proportional	Proportional band: F.S. 3% fixed, Period: 20sec. fixed		
Control output		• Relay output: 250VAC 2A 1c • SSR drive voltage output : 12VDC ±3V Load 20mA Max.	• Relay output: 250VAC 3A 1c • SSR drive voltage output: 12VDC ±3V 20mA Max.	
Self-diagnosis		Built-in burn out function (cut off output when sensor is disconnected)		
Insulation resistance		Min. 100MΩ (at 500VDC megger)		
Dielectric strength		2,000VAC 50/60Hz for 1 min.		
Noise resistance		±1kV the square wave noise(pulse width: 1μs) by the noise simulator		
Vibration	Mechanical	0.75mm amplitude at frequency of 10 to 55Hz(for 1 min.) in each of X, Y, Z directions for 1 hour		
	Malfunction	0.5mm amplitude at frequency of 10 to 55Hz(for 1 min.) in each of X, Y, Z directions for 10 min.		
Shock	Mechanical	300m/s²(approx. 30G) in each of X, Y, Z directions for 3 times		
	Malfunction	100m/s²(approx. 10G) in each of X, Y, Z directions for 3 times		
Relay life cycle	Mechanical	Min. 10,000,000 operations		
	Electrical	Min. 100,000 operations(250VAC 3A at resistive load)		
Environ-ment	Ambient temperature	-10 to 50℃, storage: -25 to 65℃		
	Ambient humidity	35 to 85%RH, storage: 35 to 85%RH		
Approval		c UL us	—	—
Unit weight		Approx. 104g	Approx. 419g	Approx. 426g

※F.S. is same with sensor measuring temperature range.
Ex) In case of using temperature is from 0 to 800℃, Full scale is "800".
※Environment resistance is rated at no freezing or condensation.

■ Connections

※RTD: DPt100Ω(3-wire type)　※Thermocouple: K, J

● TOS

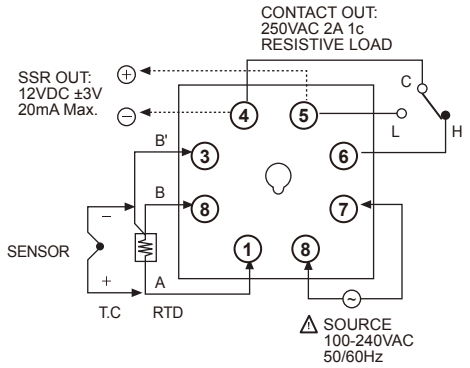

● TOM

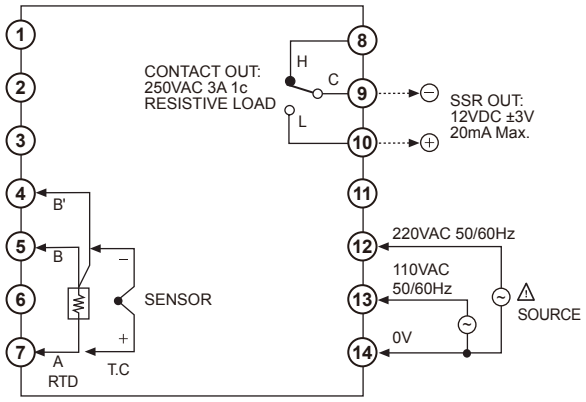

● TOL

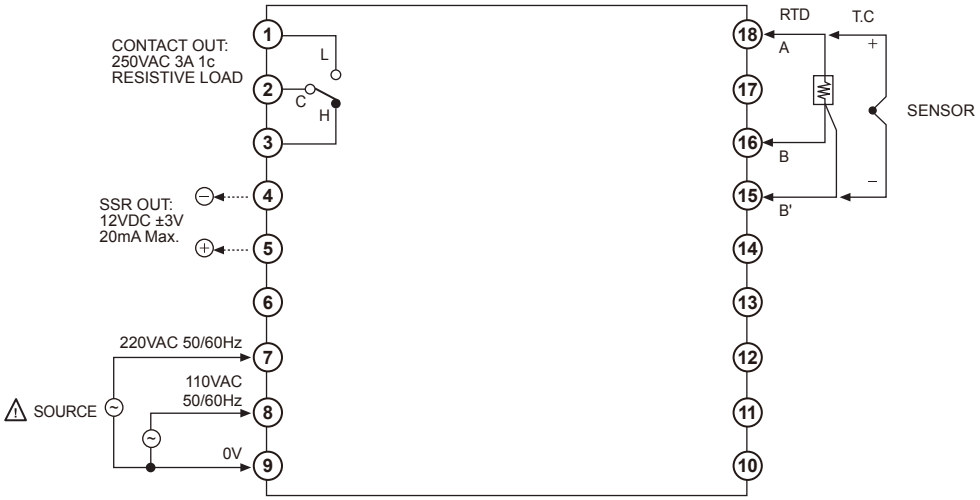

DIN W72×H36mm Freezing/Defrost type [TC3YF Series]

■ Ordering information

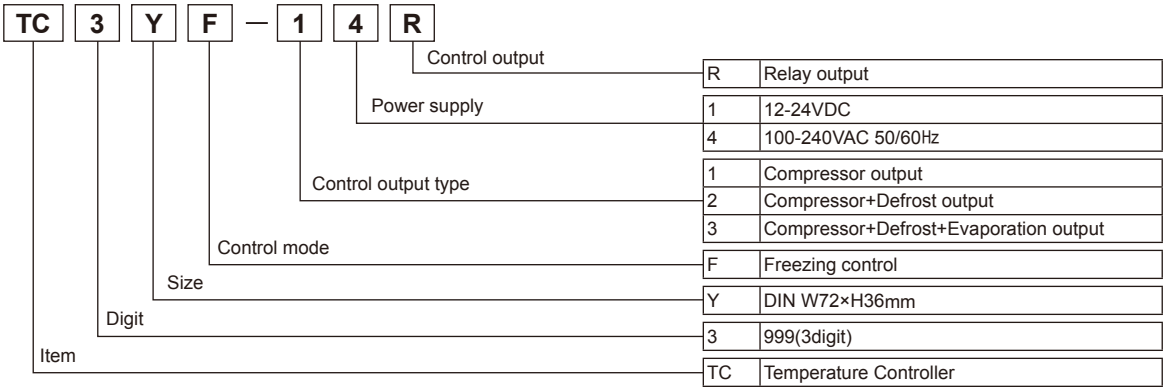

R	Relay output
1	12-24VDC
4	100-240VAC 50/60Hz
1	Compressor output
2	Compressor+Defrost output
3	Compressor+Defrost+Evaporation output
F	Freezing control
Y	DIN W72×H36mm
3	999(3digit)
TC	Temperature Controller

■ Specifications

Model		TC3YF-11R※1	TC3YF-14R※1	TC3YF-21R	TC3YF-24R	TC3YF-31R	TC3YF-34R
Appearances & Dimensions		[W72×H36×L77mm]					
Power supply		12-24VDC	100-240VAC 50/60Hz	12-24VDC	100-240VAC 50/60Hz	12-24VDC	100-240VAC 50/60Hz
Allowable voltage range		90 to 110% of rated voltage					
Power consumption		Max. 8W	Max. 4VA	Max. 8W	Max. 4VA	Max. 8W	Max. 4VA
Display method		7 Segment(red) LED method					
Character size(W×H)		7.4×15.0mm					
Indication range		NTC: -40.0 to 99.9℃(40 to 212℉), RTD: -99.9 to 99.9℃(-148 to 212℉)					
Display accuracy		(PV ±0.5% or ±1℃, select the higher one) rdg ±1digit					
Sampling period		0.5sec.					
Input sensor※2		NTC: Thermistor, RTD: DPt 100Ω					
Input line resistance		Allowable line resistance is max. 5Ω per a wire					
Control method		ON/OFF control(adjustment sensitivity 0.5 to 5.0℃, 2 to 50℉ variable)					
Control output		Compressor output (250VAC 5A 1a)		Compressor output (250VAC 5A 1a) Defrost output (250VAC 10A 1a)		Compressor output (250VAC 5A 1a) Defrost output (250VAC 10A 1a) Evaporation-fan output (250VAC 5A 1a)	
Memory protection		Approx. 10 years(when using non-volatile semiconductor memory)					
Insulation resistance		Min. 100MΩ(at 500VDC megger)					
Dielectric strength		2,000VAC 60Hz for 1 minute(between all external terminal and case)					
Noise resistance		±2kV R-phase, S-phase the square wave noise (pulse width: 1us) by the noise simulator					
Relay life cycle	COMP	Mechanical: Min. 20,000,000 times, Electrical: Min. 50,000 times(250VAC 5A resistive load)					
	DEF	Mechanical: Min. 20,000,000 times, Electrical: Min. 100,000 times(250VAC 10A resistive load)					
	FAN	Mechanical: Min. 20,000,000 times, Electrical: Min. 50,000 times(250VAC 5A resistive load)					
Vibra-tion	Mechanical	0.75mm amplitude at frequency of 10 to 55Hz(for 1 min.) in each of X, Y, Z directions for 2 hours					
	Malfunction	0.5mm amplitude at frequency of 10 to 55Hz(for 1 min.) in each of X, Y, Z directions for 10 minutes					
Environ-ment	Ambient temperature	-10 to 50℃, storage: -20 to 60℃					
	Ambient humidity	35 to 85%RH, storage: 35 to 85%RH					
Protection		Front part: IP65					
Approval		—	c UL us	—	c UL us	—	c UL us
Unit weight		Approx. 143g					

※1. There is no defrost function ※2. RTD(DPt100Ω) type is customizable.
※ Environment resistance is rated at no freezing or condensation.

■ Connections

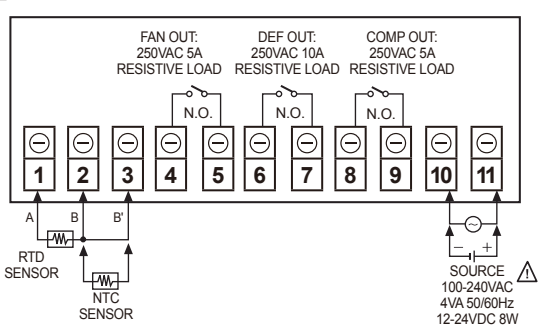

Dual PID control board type [TB42 Series]

■ Ordering information

TB 4 2 — 1 4 R

Control output

R	Relay output
S	SSR drive voltage output
C	Current output(DC4-20mA)
N	PV Transmission output(DC4-20mA)

Power supply

4	100-240VAC 50/60Hz

Sub output

1	Event 1 output type

Display

2	2 Display

Digit

4	9999(4digit)

Item

TB	Temperature Controller Board

※PV transmission output type does not have Event 1 output.

■ Specifications

Model		TB42-14R	TB42-14S	TB42-14C	TB42-14N
Appearances		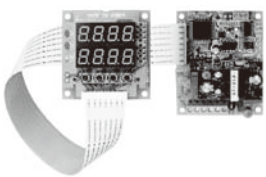			
Power supply		100-240VAC 50/60Hz ±10%			
Power consumption		Max. 5VA			
Display method		7 Segment(PV: green, SV: red) LED method			
Character size(W×H)		8×10mm			
Input type	RTD	DPt100Ω [Allowable line resistance is max. 5Ω per a wire]			
	Thermocouple	K(CA), J(IC) [Tolerance outer resistance is max. 100Ω]			
Control output	Relay	250VAC 3A 1a	—	—	—
	SSR	—	12VDC ±3V 30mA Max.	—	—
	Current	—	—	DC4-20mA (load 600Ω Max.)	—
	Transmission	—	—	—	DC4-20mA (load 600Ω Max.)
Sub output		• Event 1 output: Relay output(250VAC 0.5A 1a) • Event 2 output: OK monitoring display by LED			
Control method		ON/OFF control, P, PI, PD, PIDF, PIDS control			
Setting type		Front push buttons			
Display accuracy		F.S ± 0.3% or 3℃, select the higher one			
Hysteresis		1 to 100℃(0.1 to 100.0℃) variable (at ON/OFF control)			
Proportional band (P)		0.0 to 100.0%			
Integral time (I)		0 to 3600 sec.			
Derivative time (D)		0 to 3600 sec.			
Control cycle (T)		1 to 120 sec.			
Sampling period		0.5 sec.			
Dielectric strength		2,000VAC 50/60Hz for 1 minute(Between input and power terminal)			
Vibration		0.75mm amplitude at frequency of 10 to 55Hz(for 1 min.) in each of X, Y, Z directions for 2 hours			
Relay life cycle	Main output	Mechanical: Min. 10,000,000, Electrical: Min. 100,000(250VAC 3A resistive load)			
	Sub output	Mechanical: Min. 20,000,000, Electrical: Min. 200,000(250VAC 0.5A resistive load)			
Insulation resistance		Min. 100MΩ (at 500VDC megger)			
Noise resistance		±2kV the square wave noise(pulse width: 1μs) by the noise simulator			
Memory retention		Approx. 10 years (when using non-volatile semiconductor memory type)			
Environ-ment	Ambient temperature	-10 to 50℃, storage: -20 to 60℃			
	Ambient humidity	35 to 85%RH, storage: 35 to 85%RH			
Approval		c UL us			
Unit weight		Approx. 113.5g			

※Environment resistance is rated at no freezing or condensation.

■ Connections

※RTD: DPt100Ω(3-wire type)　※Thermocouple: K, J

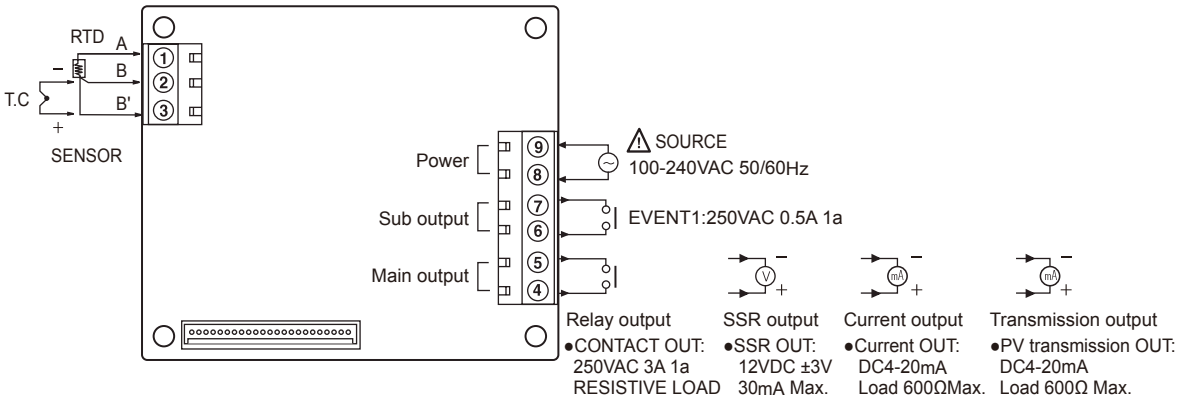

■ Dimensions

(unit: mm)

● Display part

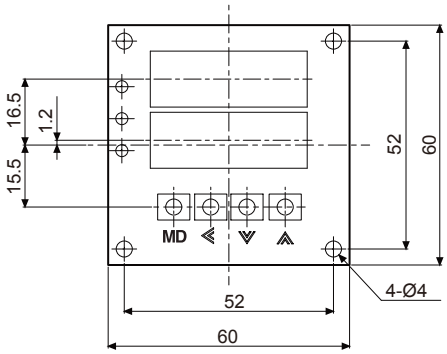

● Control part

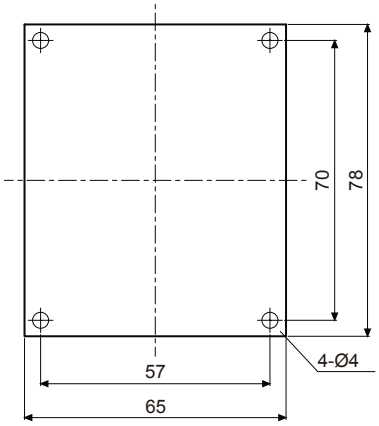

● Layout

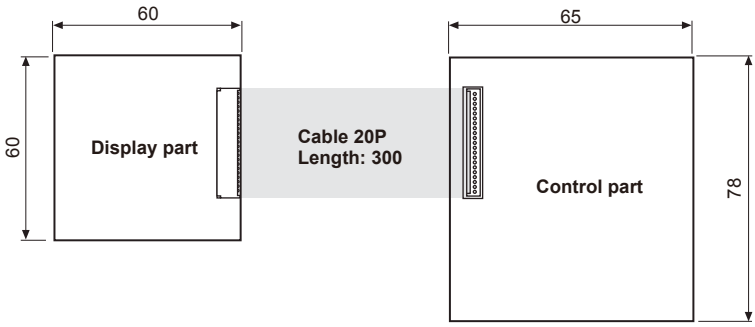

※Cable length is 300mm.
※The size of board is based on user's application. (customizable)

Indoor, Duct & Wall mounting type Temperature/Humidity transducer [THD Series]

■ Ordering information

THD — D D 1 — C

Output	※ PT	DPt100Ω resistance value(Temp.)
	※ PT/C	DPt100Ω resistance value(Temp.) / DC4-20mA current output (Humidity)
	C	DC4-20mA current output (Temp./Humidity)
	V	1-5VDC voltage output (Temp./Humidity)
	T	RS485 communication output Modbus RTU (Temp./Humidity)
Length of sensor pole	※ No mark	Built-in
	1	100mm
	2	200mm
Display	No mark	Non-Display type
	D	Display type
Mounting	R	Room type(For indoor)
	D	Duct mounting type
	W	Wall mounting type
Item	THD	Temperature Humidity Double

※It is only for THD-R.

■ Specifications

Model		THD-R-PT	THD-R-PT/C	THD-R-C THD-R-V THD-R-T	THD-D□-□ THD-W□-□	THD-DD□-□ THD-WD□-□
Appearances		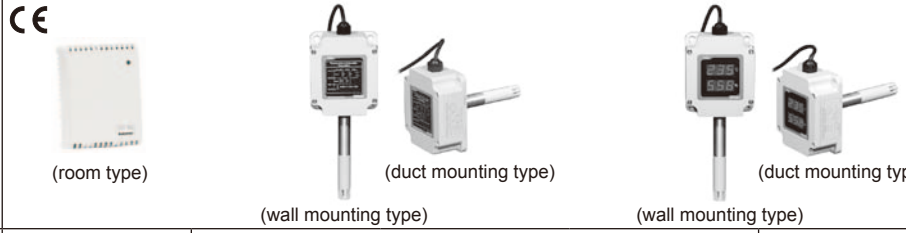 (room type) (duct mounting type) (wall mounting type) (duct mounting type) (wall mounting type)				
Display type		—	Non-indicating type			7Segment LED display
Display digit		—	—			Each 3digits for temp./humidity
Character size		—	—			W6.2×H10.0mm
Power supply		—	24VDC			
Allowable voltage range		90 to 110% of rated voltage				
Power consumption		—	Max. 2.4W			
Measuring input		Temperature (Built-in sensor)	Temperature, Humidity(Built-in sensor)			
Output※1	Temp.	DPt100Ω resistance value		DC4-20mA, 1-5VDC, RS485 communication output(Modbus RTU)		
	Humidity	—	DC4-20mA			
Measurement range	Temp.	-19.9 to 60.0℃				
	Humidity	—	0.0 to 99.9%RH(THD-R is required to attend for using over 90%RH.)			
Accuracy	Temp.	Max. ±0.8℃	-19.9 to 5.0℃: ±1.0℃, 5.0 to 40.0℃: ±0.5℃, 40.0 to 60.0℃: ±1.0℃ rdg ±1digit (At below -10ºC, within 1.5℃)			
	Humidity	—	Max. ±3%RH at 30 to 70%RH (at 25 to 45℃) 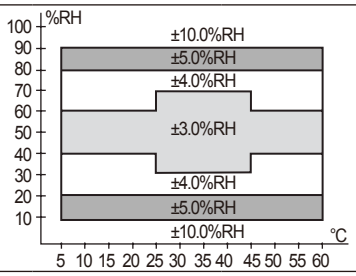			
Sampling cycle		—	Fixed in 0.5 sec.			

※1. The allowable impedance of current output is max. 600Ω

■ Specifications

Model		THD-R-PT	THD-R-PT/C	THD-R-C THD-R-V THD-R-T	THD-D□-□ THD-W□-□	THD-DD□-□ THD-WD□-□
Insulation resistance		—	Min. 100MΩ(at 500VDC megger)			
Dielectric strength		—	500VAC 50/60Hz for 1 minute			
Noise resistance		—	±0.3kV the square wave noise(pulse width:1μs) by the noise simulator			
Vibration	Mechanical	—	0.75mm amplitude at frequency of 10 to 55Hz(for 1 min.) in each of X, Y, Z directions for 1hour			
	Malfunction	—	0.5mm amplitude at frequency of 10 to 55Hz(for 1 min.) in each of X, Y, Z directions for 10min.			
Shock	Mechanical	—	300m/s²(approx. 30G) in each of X, Y, Z directions for 3 times			
	Malfunction	—	100m/s²(approx. 10G) in each of X, Y, Z directions for 3 times			
Protection		IP10			IP65(except sensing part)	
Ambient temperature		-20 to 60℃, storage: -20 to 60℃				
Cable		Terminal type			4-wire, ø4mm, Length: 2m	
Approval		CE				
Unit weight		Approx. 55g			Approx. 160g	

※ Environment resistance is rated at no freezing or condensation.

■ Dimensions

(unit: mm)

● THD-R-□ / THD-R-PT / THD-R-PT/C

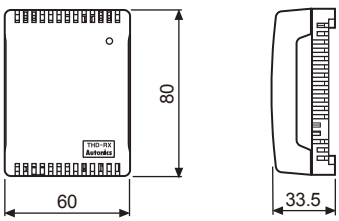

●Panel cut-out

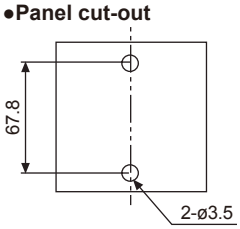

● THD-D□-□ / THD-DD□-□

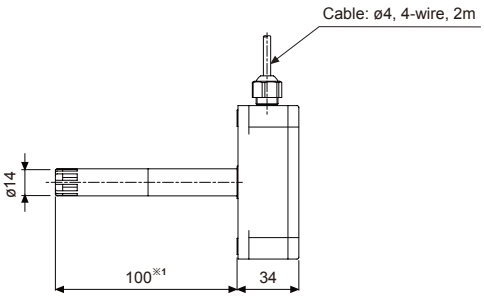

※1: Refer to the ordering information to select the one with 2 sensing poles (100m, 200m).

※Refer to the ordering information about display model, THD-DD□-□, THD-WD□-□.

● THD-W□-□ / THD-WD□-□

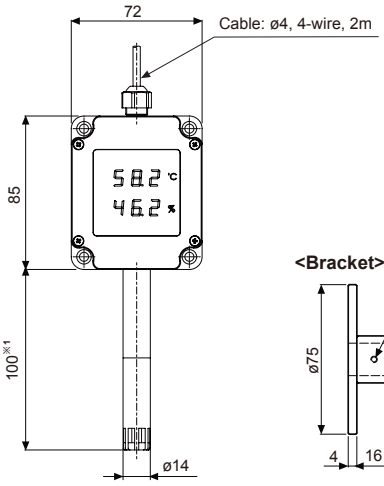

●Panel cut-out

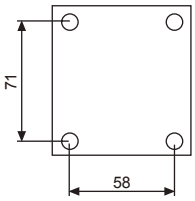

<Bracket>

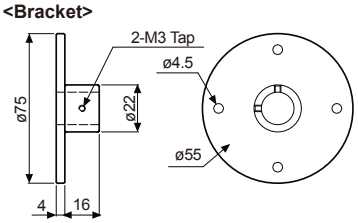

■ Connections

◎ THD-R

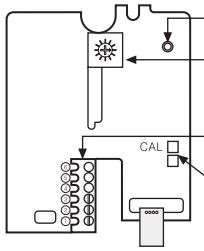

Display LED

RS485 communication address(Communication speed) setting switch(SW1)

Terminal block

Terminal(CAL) for setting the lower address (It is on back side of PCB.)

Automatic switching function of 5 point temperature indication [T4WM Series]

■ Ordering information

T 4 W M — N 3 N P 4 C

Unit	C	℃
Temperature range	0	-99.9 to 199.9
	4	0 to 399
	5	0 to 500
	C	0 to 1200
Sensor input type	P	DPt100Ω
	J	J(IC)
	K	K(CA)
Control output	N	No output
Power supply	3	110/220VAC 50/60Hz
Control method	N	No control
Input	M	5 Point Indicator
Size	W	DIN W96×H48mm
Digit	4	9999(4digit)
Item	T	Temperature Controller

※**Please check the range of temperature when select model.**

■ Temperature range for each sensor

Model	T4WM		
Sensor input type	Thermocouples		RTD
	J(IC)	K(CA)	DPt100Ω
Standard scale range (℃) 1600, 1200, 1000, 800, 600, 400, 200, 100, 0, -100	500℃	1200℃	199.9℃ / 399℃ / -99.9℃

■ Specifications

Series		**T4WM**
Appearances & Dimensions		[W96×H48×L99.6mm]
Power supply		110/220VAC 50/60Hz
Allowable voltage range		90 to 110% of rated voltage
Power consumption		Max. 3VA
Display method		7 Segment(red) LED method
Character size(W×H)		9.8×14.2mm
Display accuracy		F.S. ±0.5% rdg ±1digit
Input sensor		Thermocouples : K(CA), J(IC) / RTD: DPt100Ω
Input line resistance		Thermocouples: Max. 100Ω / RTD: Allowable line resistance max. 5Ω per a wire
Connectable sensors		5EA(thermocouple, RTD are not used as mixed)
Channel switch		Selectable Auto/Manual switching
Auto switching time		Variable 1 to 10 sec.(by built-in VR)
Insulation resistance		Min. 100MΩ(at 500VDC megger)
Dielectric strength		2,000VAC 50/60Hz for 1 min.
Noise strength		±1kV the square wave noise(pulse width: 1μs) by the noise simulator
Vibration	Mechanical	0.75mm amplitude at frequency of 10 to 55Hz(for 1 min.) in each of X, Y, Z directions for 1 hour
	Malfunction	0.5mm amplitude at frequency of 10 to 55Hz(for 1 min.) in each of X, Y, Z directions for 10 min.
Shock	Mechanical	300m/s²(approx. 30G) in each of X, Y, Z directions for 3 times
	Malfunction	100m/s²(approx. 10G) in each of X, Y, Z directions for 3 times
Environ-ment	Ambient temperature	-10 to 50℃, storage:-25 to 65℃
	Ambient humidity	35 to 85%RH, storage: 35 to 85%RH
Unit weight		Approx. 322g

※Environment resistance is rated at no freezing or condensation.

■ Connections
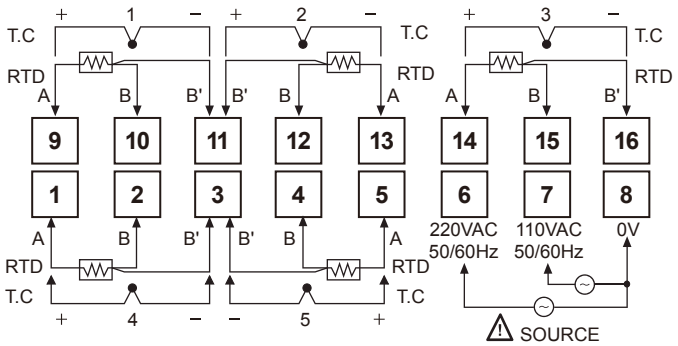
※RTD: DPt100Ω(3-wire type)　※Thermocouple: K, J