Auto door sensor [ADS-AF/AE]

■ Specifications

Model		ADS-AF	ADS-AE
Appearances			
Cover color		Silver	
Power supply		24-240VAC ±10% 50/60Hz, 24-240VDC ±10%(ripple P-P: Max. 10%)	12-24VAC ±10% 50/60Hz, 12-24VDC ±10%(ripple P-P: Max. 10%)
Power consumption		Max. 4VA(at 240VAC)	Max. 2VA(at 24VAC)
Control output	Contact type	1a	
	Contact capacity※1	50VDC 0.1A(Resistive load)	
Relay life cycle		Mechanical: Min. 20,000,000 times, Electrical: Min. 50,000 times	
Mounting height		2.0m to 2.7m(max. sensing distance: 3m)	
Sensing method		Infrared reflection method	
Output holding time		Time delay approx. 0.5sec.	
Holding time of stationary sensing		Selectable 2sec., 7sec., 15sec. (selectable by holding time setting switch)	
Interference prevention		H, L (selectable by interference prevention switch)	
Front sensing area		7.5°, 14.5°, 21.5°, 28.5°: 4 steps variable (adjusting by angle adjuster)	
Adjustable sensing area		(1, 2, 3 Area), (7, 8, 9 Area) Eliminate each by each : Adjusting with eliminating right/left sensing area lever	
Light source		Infrared emitting diode(modulated)	
Indicator		Operation indicator: Orange, Green, Red	
Connection method		Connector wire connection	
Insulation resistance		Min. 20MΩ(at 500VDC megger)	
Noise resistance		±2,000V the square wave noise(pulse width:1μs) by the noise simulator	
Dielectric strength		1,000VAC 50/60Hz for 1 minute	
Vibration		1.5mm amplitude at frequency of 10 to 55Hz in each of X, Y, Z directions for 2 hours	
Shock		100m/s² (approx. 10G) in each of X, Y, Z directions for 3 times	
Environ-ment	Ambient illumination	Sunlight: Max. 3,000lx ,Incandescent lamp: Max. 3,000lx (receiver illumination)	
	Ambient temperature	-20℃ to 50℃, storage: -20 to 70℃	
	Ambient humidity	35 to 85%RH, storage: 35 to 85%RH	
Accessory		Cable: 2.5m, Mounting screw: 2EA, Mounting template	
Protection		IP50(IEC standard)	
Material		• Case: ABS • Lens: Acryl • Lens cover: Acryl	
Unit weight		Approx. 320g	

※**1: Do not use Load which is beyond the rated capacity of contact point of Relay.**
It can cause bad insulation, contact fusion, bad contact, relay breakdown, and fire etc.
※The temperature or humidity mentioned in Environment indicates a non freezing or condensation environment.

■ Dimensions

(unit:mm)

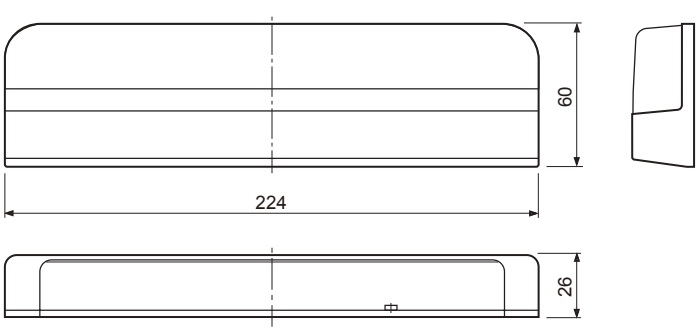

Door side sensor [ADS-SE]

■ Specifications

Model		**ADS-SE**
Appearances		
Sensing type		Through-beam type
Sensing distance		0 to 10m
Power supply		12-24VAC/DC ±10%(ripple P-P: Max. 10%)
Power/Current consumption		AC: Max. 2VA / DC: Max. 50mA
Contact output ※1		• Contact capacity: 50VDC 0.3A(resistive load) • Contact composition: 1c • Relay life cycle: Mechanical- Min. 5,000,000 operations, Electrical- Min. 100,000 operations
Response time		Approx. 50ms(from light OFF)
Output holding time		Approx. 500ms(from light ON)
Available sensor set		2set
Indicator		Operation indicator: Red, Green
Light source		Infrared LED(850nm modulated)
Environ-ment	Ambient illumination	Sunlight: Max. 100,000lx (receiver illumination)
	Ambient temperature	-20 to 55℃, storage: -25 to 60℃
	Ambient humidity	35 to 85%RH, storage: 35 to 85%RH
Protection		IP30(IEC standard)
Sensor cable length		10m
Material		• Case: ABS • Sensing part: PMMA
Accessory		Sensor: 1 set(ADS-SH), Fixing bolt for controller: 2 pieces
Unit weight		Approx. 300g

※**1: Do not use Load which is beyond the rated capacity of contact point of Relay.**
It can cause bad insulation, contact fusion, bad contact, relay breakdown, and fire etc.
※Please purchase 1 set of sensor separately when mounting 2 sets of sensor.
※The mounting bracket of sensor (ADS-SB12, ADS-SB10) is sold separately.
※It is enable to purchase a controller (ADS-SEC) separately.
※The temperature or humidity mentioned in Environment indicates a non freezing or condensation environment.

■ Dimensions

(unit: mm)

● Controller (ADS-SEC)

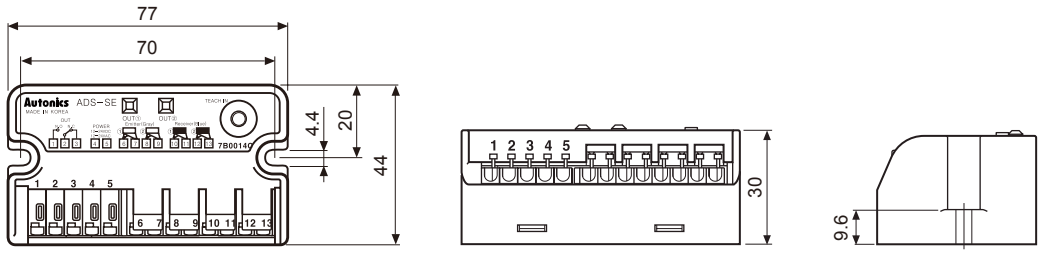

<ADS-SEC>

● Sensors (ADS-SH)

• One push type

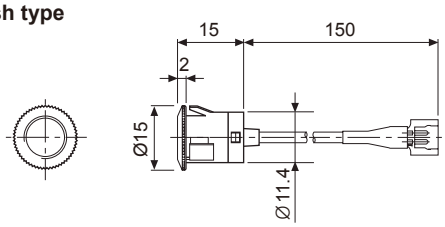

• Screw type

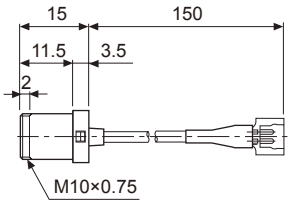

Door side sensor [ADS-SE1/2]

■ Specifications

Model		ADS-SE1(1-channel)	ADS-SE2(2-channel)
Appearances		NEW	
Sensing type		Through-beam type	
Sensing distance		0 to 10m	
Power supply		12-24VAC ±10% 50/60Hz / 12-24VDC ±10%(ripple P-P: Max. 10%)	
Power consumption/Current		AC: Max. 2VA, DC: Max. 50mA	
Control output ※1		• Contact capacity: 50VDC 0.3A(resistive load) • Contact composition: 1c • Relay life cycle: Mechanical- Min. 5,000,000 operations, Electrical- Min. 100,000 operations	
Response time		Approx. 50ms (from light OFF)	
Output holding time		Approx. 500ms (from light ON)	
Available sensor set		1 channel	2 channels
Indicator		OUT1 indicator: red, OUT2 indicator: green	
Light source		Infrared LED(850nm modulated)	
Vibration		1.5mm amplitude at frequency of 10 to 55Hz (for 1min.) in each of X, Y, Z directions for 2 hours	
Shock		500m/s^2 (approx. 50G) in each of X, Y, Z directions for 3 times	
Environ-ment	Ambient illumination	Sunlight: Max. 100,000lx (receiver illumination)	
	Ambient temperature	-20 to 55℃, storage: -25 to 60℃	
	Ambient humidity	35 to 85% RH, storage: 35 to 85% RH	
Protection		IP30(IEC standard)	
Sensor cable length		5m	
Cable		Ø2.4mm, 1-wire, length: 5m(AWG26, core diameter: 0.16mm, number of cores: 7, insulator out diameter: Ø1.32mm)	
Material		• Case: ABS • Lens: PMMA	
Accessory		Sensor 1set(ADS-SHP), Fixing bolt (M4×20) for controller: 2EA	
Approval		CE	
Unit※2		Approx. 450g (approx. 300g)	

※**1: Do not use Load which is beyond the rated capacity of contact point of Relay.**
It can cause bad insulation, contact fusion, bad contact, relay breakdown, and fire etc.
※2: The weight is with packaging and the weight in parentheses is only unit weight.
※Please purchase 1 set of sensor separately when mounting 2 sets of sensor.
※The mounting bracket of sensor (ADS-SB12, ADS-SB10) is sold separately.
※It is enable to purchase a controller (ADS-SEC1/2) separately.
※The temperature or humidity mentioned in Environment indicates a non freezing or condensation environment.

■ Dimensions

(unit:mm)

• Controller(ADS-SEC1/2)

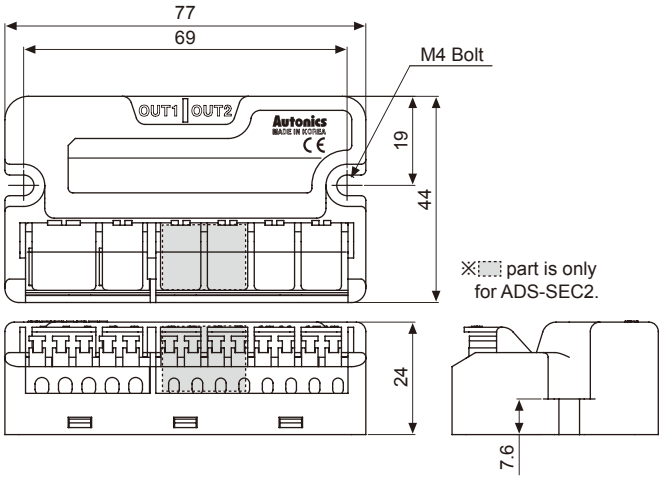

• Sensor(ADS-SHP)

• One push method

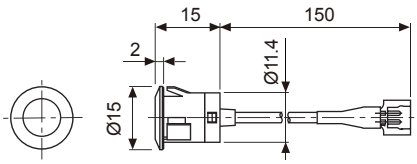

• Screw mehtod

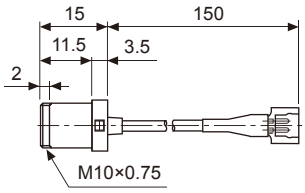

Cross-beam Area Sensor [BWC Series]

■Specifications

Model		BWC40-□□H	BWC40-□□HD	BWC80-14H	BWC80-14HD
Appearances		NEW CE			
Sensing type		Through-beam type			
Sensing distance		1.0 to 7.0m			
Sensing target		Opaque material of min. Ø50mm		Opaque material of min. Ø90mm	
Optical axis pitch		40mm		80mm	
Number of optical axes		4/10/12/16/18/20EA		14EA	
Sensing height		120 to 760mm		1,040mm	
Beam pattern		3-point cross-beam netting type			
Power supply		12-24VDC ±10%(ripple P-P: max. 10%)			
Reverse polarity protection		Built-in			
Current consumption		Max. 100mA			
Control output		NPN open collector output •Load voltage: max. 30VDC, •Load current: Max. 100mA, •Residual voltage: Max. 1V			
	Operation mode	Light ON	Dark ON	Light ON	Dark ON
	Short-circuit protection	Built-in			
	Response	Max. 50ms			
Light source		Infrared LED(850nm modulated light type)			
Synchronization type		Timing method by synchronous cable			
Self-diagnosis		Transmitted-received light monitoring, direct light monitoring, output circuit monitoring			
Interference protection		Interference protection by frequency changing setting			
Environ-ment	Ambient illumination	Ambient light: Max. 100,000lx (received light side illumination)			
	Ambient temperature	-10 to 55℃, storage: -20 to 60℃			
	Ambient humidity	35 to 85%RH, storage: 35 to 85%RH			
Protection		IP65(IEC standard)			
Noise resistance		±240V the square wave noise (pulse width: 1μs) by the noise simulation			
Dielectric strength		1,000VAC 50/60Hz for 1 min.			
Insulation resistance		Min. 20MΩ (at 500VDC megger)			
Vibration		1.5mm amplitude at frequency of 10 to 55Hz(for 1 min.) in each of X, Y, Z directions for 2 hour			
Shock		500m/s^2 (approx. 50G) in each of X, Y, Z directions for 3 times			
Material		• Case: Aluminum • Sensing part and indicator: Acrylic			
Cable		Ø5mm, 4-core, length: 300mm, M12 connector			
Accessory		Bracket A: 4EA, Bracket B: 4EA, Fixing bolt: 8EA			
Approval		CE			
Unit weight		Approx. 1.7kg (based on BWC80-14H)			

※The temperature or humidity mentioned in Environment indicates a non freezing or condensation environment.

■ Dimensions

(unit: mm)

Model	L(mm)
BWC40-04H/HD	180mm
BWC40-10H/HD	420mm
BWC40-12H/HD	500mm
BWC40-16H/HD	660mm
BWC40-18H/HD	740mm
BWC40-20H/HD	820mm
BWC80-14H/HD	1140mm

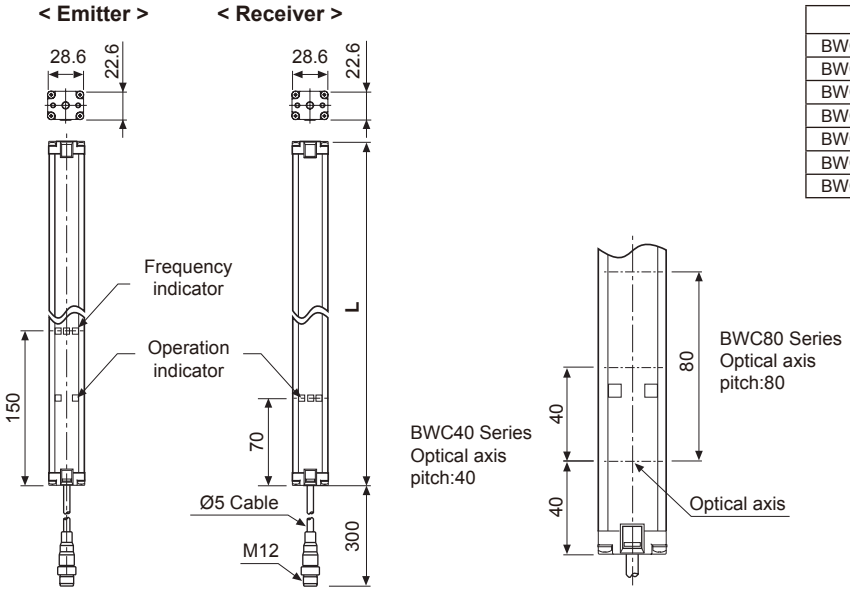

Area sensor [BW Series]

■ Specifications

Model	NPN open collector output (standard)	**BW20-08 BW20-20 BW20-32 BW20-44 BW20-12 BW20-24 BW20-36 BW20-48 BW20-16 BW20-28 BW20-40**	**BW40-04 BW40-10 BW40-16 BW40-22 BW40-06 BW40-12 BW40-18 BW40-24 BW40-08 BW40-14 BW40-20**
	PNP open collector output	**BW20-08P BW20-20P BW20-32P BW20-44P BW20-12P BW20-24P BW20-36P BW20-48P BW20-16P BW20-28P BW20-40P**	**BW40-04P BW40-10P BW40-16P BW40-22P BW40-06P BW40-12P BW40-18P BW40-24P BW40-08P BW40-14P BW40-20P**
Appearances			
Sensing type		Through-beam	
Sensing distance		0.1 to 7m	
Sensing target		Opaque materials of Min.Ø30mm	Opaque materials of Min.Ø50mm
Optical axis pitch		20mm	40mm
Number of optical axis		8 to 48EA	4 to 24EA
Sensing width		140 to 940mm	120 to 920mm
Power supply		12-24VDC ±10%(ripple P-P: Max. 10%)	
Reverse polarity protection		Built-in	
Current consumption		Emitter: Max. 80mA, Receiver: Max. 80mA	
Control output		NPN or PNP open collector output • Load voltage: Max. 30VDC • Load current: Max. 100mA • Residual voltage - NPN: Max. 1V, PNP: Min. 2.5V	
Operation mode		Light ON (fixed)	
Short-circuit protection		Built-in	

Area sensor [BW Series]

■ Specifications

Model	NPN open collector output (standard)	BW20-08 BW20-20 BW20-32 BW20-44 BW20-12 BW20-24 BW20-36 BW20-48 BW20-16 BW20-28 BW20-40	BW40-04 BW40-10 BW40-16 BW40-22 BW40-06 BW40-12 BW40-18 BW40-24 BW40-08 BW40-14 BW40-20
	PNP open collector output	BW20-08P BW20-20P BW20-32P BW20-44P BW20-12P BW20-24P BW20-36P BW20-48P BW20-16P BW20-28P BW20-40P	BW40-04P BW40-10P BW40-16P BW40-22P BW40-06P BW40-12P BW40-18P BW40-24P BW40-08P BW40-14P BW40-20P
Response time		Max. 12ms	
Light source		Infrared LED(850nm modulated)	
Synchronization type		Synchronized by synchronous line	
Self-diagnosis		Ambient light monitoring, Emitter/Receiver light circuit monitoring, Output circuit monitoring	
Interference protection		Interference protection by master/slave function	
Environ-ment	Ambient illumination	Sunlight: 10,000lx (received light side illumination)	
	Ambient temperature	-10 to 55℃, storage: -20 to 60℃	
	Ambient humidity	35 to 85%RH, storage: 35 to 85%RH	
Noise resistance		±240V the square wave noise (pulse width: 1μs) by the noise simulation	
Dielectric strength		1,000VAC 50/60Hz for 1minute	
Insulation resistance		Min. 20MΩ(at 500VDC megger)	
Vibration		1.5mm amplitude at frequency of 10 to 55Hz(for 1 min.) in each of X, Y, Z directions for 2 hour	
Shock		500m/s² (approx. 50G) in X, Y, Z directions for 3 times	
Protection		IP65(IEC standard)	
Material		• Case: Aluminum • Cover, Sensing part: Acrylic	
Cable		Ø5mm, 4-core, length: 300mm, M12 connector	
Accessory		Bracket A: 4EA, Bracket B: 4EA, Fixing bolt: 8EA	
Approval		CE	
Unit weight		Approx. 1.4kg(for 48 optical axises)	

※The temperature or humidity mentioned in Environment indicates a non freezing or condensation environment.

■ Dimensions

(unit: mm)

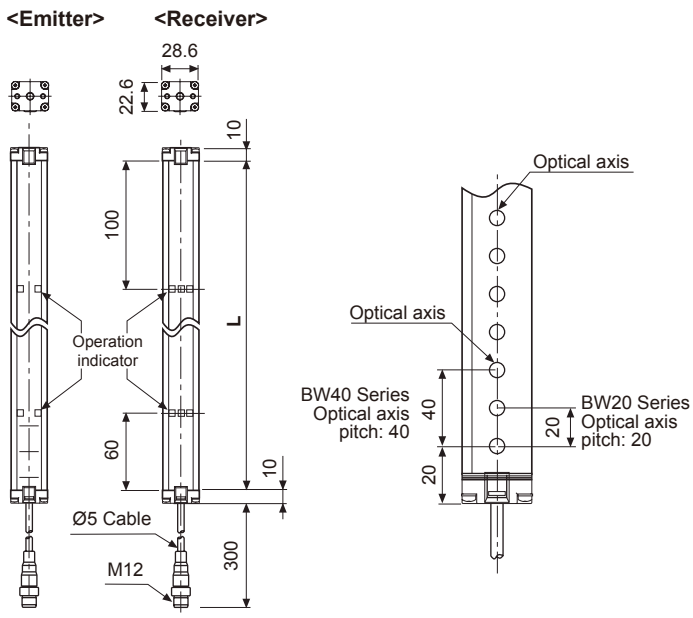

Model	L(mm)	Model	L(mm)
BW20-08(P)	160	BW20-32(P)	640
BW40-04(P)		BW40-16(P)	
BW20-12(P)	240	BW20-36(P)	720
BW40-06(P)		BW40-18(P)	
BW20-16(P)	320	BW20-40(P)	800
BW40-08(P)		BW40-20(P)	
BW20-20(P)	400	BW20-44(P)	880
BW40-10(P)		BW40-22(P)	
BW20-24(P)	480	BW20-48(P)	960
BW40-12(P)		BW40-24(P)	
BW20-28(P)	560		
BW40-14(P)			

Area sensor with plastic case [BWP Series]

■ Specifications

Model	NPN open collector output	**BWP20-08**	**BWP20-12**	**BWP20-16**	**BWP20-20**
	PNP open collector output	**BWP20-08P**	**BWP20-12P**	**BWP20-16P**	**BWP20-20P**
Appearances		CE			
Sensing type		Through-beam			
Sensing distance		0.1 to 5m			
Sensing target		Opaque materials of Min.Ø30mm			
Optical axis pitch		20mm			
Number of optical axis		8EA	12EA	16EA	20EA
Sensing width		140mm	220mm	300mm	380mm
Power supply		12-24VDC ±10%(ripple P-P: Max. 10%)			
Protection circuit		Built-in			
Current consumption		Emitter: Max. 80mA, Receiver: Max. 80mA			
Control output		NPN or PNP open collector output • Load voltage: Max. 30VDC • Load current: Max. 150mA • Residual voltage - NPN: Max. 1V, PNP: Min. 2.5V			
Operation mode		Light ON/Dark ON by switch			
Short-circuit protection		Built-in			
Response time		Max. 6ms(Frequency B selection is max. 7ms)			
Light source		Infrared LED(850nm modulated)			
Synchronization type		Synchronized by synchronous line			
Interference protection		Interference protection by transmission frequency selection			
Environ-ment	Ambient illumination	Sunlight: Max. 10,000lx (received light side illumination)			
	Ambient temperature	-10 to 55℃, storage: -20 to 60℃			
	Ambient humidity	35 to 85%RH, storage: 35 to 85%RH			
Noise resistance		±240V the square wave noise (pulse width: 1μs) by the noise simulation			
Dielectric strength		1,000VAC 50/60Hz for 1minute			
Insulation resistance		Min. 20MΩ(at 500VDC megger)			
Vibration		1.5mm amplitude at frequency of 10 to 55Hz(for 1 min.) in each of X, Y, Z directions for 2 hour			
Shock		500m/s²(approx. 50G) in each of X, Y, Z directions for 3 times			
Protection		IP40(IEC standard)			
Material		• Case: PC/ABS • Sensing part: PMMA			
Cable		Ø3.5mm, 4-wire, Length: 3m(Emitter: Ø3.5mm, 4-wire, Length: 3m) (AWG 24, Core diameter: 0.08mm, Number of cores: 40, Insulator out diameter: Ø1mm)			
Approval		CE			
Unit weight		Approx. 280g	Approx. 320g	Approx. 360g	Approx. 430g

※The temperature or humidity mentioned in Environment indicates a non freezing or condensation environment.

■ Dimensions

(unit: mm)

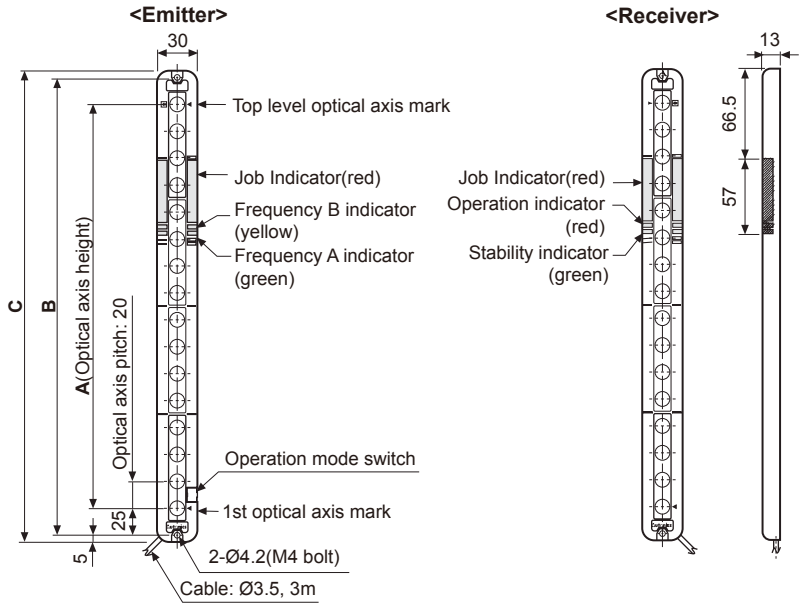

Model	A	B	C
BWP20-08	140	180	190
BWP20-12	220	260	270
BWP20-16	300	340	350
BWP20-20	380	420	430

※Use M4 bolt for installing sensor, and tightening torque should be under 20kgf·cm

Picking sensor [BWPK Series]

■ Specifications

Model	NPN open collector output	**BWPK25-05**
	PNP open collector output	**BWPK25-05P**
Appearances		CE
Sensing type		Through-beam
Sensing distance	Long distance mode	0.1 to 3m
	Short distance mode	0.05 to 1m
Sensing target		Opaque materials of Min.Ø35mm
Optical axis pitch		25mm
Number of optical axis		5EA
Sensing width		100mm
Power supply		12-24VDC ±10%(ripple P-P: Max. 10%)
Current consumption		Emitter: Max. 60mA, Receiver: Max. 60mA
Control output		NPN or PNP open collector output • Load voltage: Max. 30VDC • Load current: Max. 150mA • Residual voltage - NPN: Max. 1V, PNP: Min.2.5V
Operation mode		Selectable Light ON/Dark ON by switch
Response time		Max. 30ms
Light source		Infrared LED(850nm modulated)
Interference protection		Interference protection by transmission frequency selection

Model	NPN open collector output	**BWPK25-05**
	PNP open collector output	**BWPK25-05P**
Protection circuit		Reverse power polarity, Output short-circuit(Overcurrent) protection
External picking input		Non-contact or contact input • NPN open collector output: Lighting(0-2V), Light out(5-30V or open) • PNP open collector output: Lighting(4-30V), Light out(0-3V or open)
Environ-ment	Ambient illumination	Sunlight: Max. 10,000lx, Incandescent lamp: Max. 3,000lx (received light side illumination)
	Ambient temperature	-10 to 55℃, storage: -20 to 60℃
	Ambient humidity	35 to 85%RH, storage: 35 to 85%RH
Insulation resistance		Min. 20MΩ(at 500VDC megger)
Noise resistance		±240V the square wave noise (pulse width: 1μs) by the noise simulation
Dielectric strength		1,000VAC 50/60Hz for 1minute
Vibration		1.5mm amplitude at frequency of 10 to 55Hz(for 1 min.) in each of X, Y, Z directions for 2 hour
Shock		500m/s² (approx. 50G) in each of X, Y, Z directions for 3 times
Protection		IP40(IEC standard)
Material		• Case: PC/ABS • Sensing part: PMMA
Cable		Ø4.0mm, 4-wire, Length: 2m(Emitter: Ø4.0mm, 3-wire, Length: 2m) (AWG 22, Core diameter: 0.08mm, Number of cores: 60, Insulator out diameter: Ø1.25mm)
Approval		CE
Unit weight		Approx. 250g

※The temperature or humidity mentioned in Environment indicates a non freezing or condensation environment.

■ Dimensions
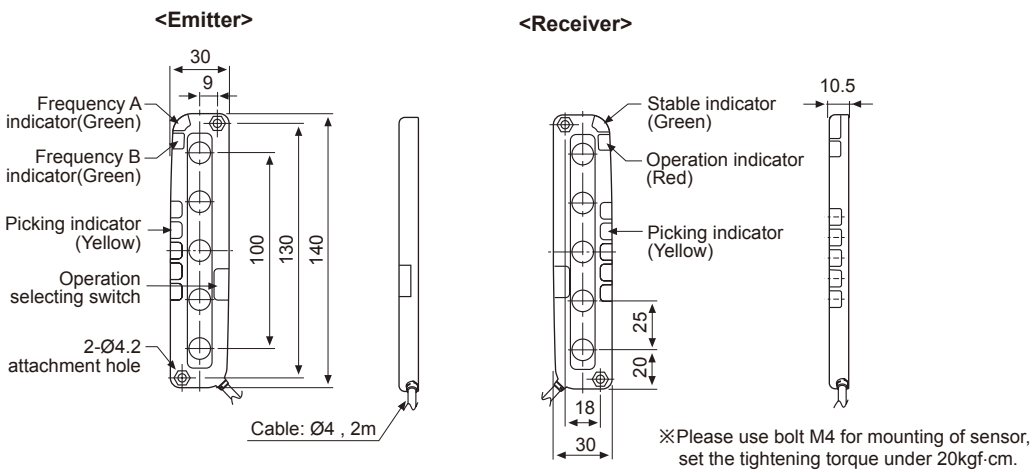
(unit: mm)