38mm Slim design, touch screen, and better reliability Graphic panel, GP-S044

■ Specifications

Model		GP-S044-S1D0	GP-S044-S1D1
Appearances			
Power supply		24VDC	
Allowable voltage range		90 to 110% of power supply	
Power consumption		Max. 3.6W	
Display performance	LCD type	4.4 inch STN Blue Negative	
	Resolution	240×80 dots	
	Display area	112.8mm×37.6mm	
	Color	MONO(blue, white)	
	LCD view angle	Top/Bottom/Left/Right 30° in each direction	
	Backlight	White LED	
	Brightness	Adjustable by software	
Graphic drawing performance	Language※1	English, Korean, Japanese, Chinese, Russian, Vietnamese, Portuguese	
	Text	• High resolution display up to 400 letters(6×8 font) • 6×8, 8×8 ASCII characters, high definition numbers • 8×16 ASCII characters, 16×16 regional characters(1-8 times bigger for width, 0.5-5 times bigger for height)	
	Graphic drawing memory	512 KB	
	Number of user screen	500 pages	
	Touch switch	Width 15×Height 4 = 60	
Serial interface		Each port of RS232C, RS422(asynchronous method)	Two ports of RS232C(asynchronous method)
Real-time controller		RTC embedded	
Battery life cycle		Approx. 3 years at 25℃	
Insulated resistance		Min. 100MΩ(at 500VDC megger)	
Ground		3rd grounding(max. 100Ω)	
Noise resistance		± 0.5kV the square wave noise(pulse width: 1μs) by the noise simulator	
Dielectric strength		500VAC(50/60Hz) for 1 min.	
Vibration	Mechanical	0.75mm amplitude at frequency of 10 to 55Hz(for 1 min.) in each of X, Y, Z directions for 1 hour	
	Malfunction	0.5mm amplitude at frequency of 10 to 55Hz(for 1 min.) in each of X, Y, Z directions for 10 min.	
Shock	Mechanical	300m/s²(approx. 30G) in each of X, Y, Z directions for 3 times	
	Malfunction	100m/s²(approx. 10G) in each of X, Y, Z directions for 3 times	
Environ -ment	Ambient temperature	0℃ to 50℃, storage: -20℃ to 60℃	
	Ambient humidity	35 to 85% RH, storage: 35 to 85% RH	
Protection ratings		IP65F(for front panel)	
Accessory		Fixing bracket: 4EA, Rubber waterproof ring, Battery(included)	
Approval		CE K	
Weight※2		Approx. 413g(approx. 284g)	

※1: Language can be customized.
※2: This weight is with packaging and the weight in parentheses is only unit weight.
※Environment resistance is rated at no freezing or condensation.

High visibility with 5.7inch wide screen Graphic panel GP-S057

■ Specifications

Model		GP-S057-S1D0	GP-S057-S1D1
Appearances			
Power supply		24VDC	
Allowable voltage range		90 to 110% of power supply	
Power consumption		Max. 3.6W	
Display performance	LCD type	5.7inch STN blue negative	
	Resolution	320×240 dots	
	Display area	119mm×91mm	
	Color	MONO(blue, white)	
	LCD view angle	Top/Bottom/Left/Right 30°in each direction	
	Backlight	White LED	
	Brightness	Adjustable by software	
Graphic drawing performance	Language※1	English, Korean, Japanese, Chinese, Russian, Vietnamese, Portuguese	
	Text	• High resolution display up to 1590 letters(6×8 font) • 6×8, 8×8 ASCII character, high definition numbers • 8×16 ASCII characters, 16×16 regional characters(1-8 times bigger for width, 0.5-5 times bigger for height)	
	Graphic drawing memory	512 KB	
	Number of user screen	500 pages	
	Touch switch	Width 16×Height 12 = 192	
Serial interface		Each port of RS232C, RS422(asynchronous method)	Two ports of RS232C(asynchronous method)
Real-time controller		RTC embedded	
Battery life cycle		Approx. 3 years at 25℃	
Insulated resistance		Min. 100MΩ(at 500VDC megger)	
Ground		3rd grounding(max. 100Ω)	
Noise resistance		± 0.5kV the square wave noise(pulse width : 1μs) by the noise simulator	
Dielectric strength		500VAC(50/60Hz) for 1 min.	
Vibration	Mechanical	0.75mm amplitude at frequency of 10 to 55Hz(for 1 min.) in each of X, Y, Z directions for 1 hour	
	Malfunction	0.5mm amplitude at frequency of 10 to 55Hz(for 1 min.) in each of X, Y, Z directions for 10 min.	
Shock	Mechanical	300m/s² (approx. 30G) in each of X, Y, Z directions for 3 times	
	Malfunction	100m/s² (approx. 10G) in each of X, Y, Z directions for 3 times	
Environ -ment	Ambient temperature	0 to 50℃, storage : -20 to 60℃	
	Ambient humidity	35 to 85%RH, storage : 35 to 85%RH	
Protection ratings		IP65F(for front panel)	
Accessory		Fixing bracket : 4EA, Rubber waterproof ring, Battery(included)	
Approval		CE K	
Weight※2		Approx. 555g(approx. 376g)	

※1: Language can be customized.
※2: This weight is with packaging and the weight in parentheses is only unit weight.
※Environment resistance is rated at no freezing or condensation.

7 inch wide screen, TFT Color LCD type
Graphic touch panel GP-S070

■ Specifications

Model		GP-S070-T9D6	GP-S070-T9D7
Appearances		NEW	
Power supply		24VDC	
Allowable voltage range		90 to 110% of power supply	
Power consumption		Max. 7.2W	
Display performance	LCD type	7 inch TFT Color LCD	
	Resolution	800×480 dots	
	Display area	152.4mm×94.44mm	
	Color	16,777,216 color	
	LCD view angle	Within each 50°/ 60°/ 65°/ 65°of top/bottom/left/right	
	Backlight	White LED	
	Brightness	Adjustable by software	
Graphic drawing performance	Language※1	English, Korean	
	Text	• Vector font • 6×8, 8×8 ASCII character, high definition numbers • 8×16 ASCII characters, 16×16 regional characters(1 to 8 times bigger for width, 0.5 to 5 times bigger for height)	
	Graphic drawing memory	16MB	
	Number of user screen	500 pages	
	Touch switch	Analog touch	
Serial interface		Asynchronous method: Each port of RS232C, RS422	
		Each port of RS232C, RS422	Two ports of RS232C
USB interface		Each of USB HOST, USB Device(Version 1.1)	
Ethernet interface		IEEE802.3(U), 10/100Base-T	
Real-time controller		RTC embedded	
Battery life cycle		Approx. 3 years at 25℃	
Insulated resistance		Min. 100MΩ(at 500VDC megger)	
Ground		3rd grounding(max. 100Ω)	
Noise resistance		± 0.5kV the square wave noise(pulse width: 1μs) by the noise simulator	
Withstanding voltage		500VAC 50/60Hz for a minute	
Vibration	Mechnical	0.75mm amplitude at frequency of 10 to 55Hz(for 1 min.) in each of X, Y, Z directions for 1 hour	
	Malfunction	0.5mm amplitude at frequency of 10 to 55Hz(for 1 min.) in each of X, Y, Z directions for 10 min.	
Shock	Mechanical	300m/s²(approx. 30G) in each of X,Y,Z directions for 3 times	
	Malfunction	100m/s²(approx. 10G) in each of X,Y,Z directions for 3 times	
Environ -ment	Ambient temperature	0 to 50℃, storage: -20 to 60℃	
	Ambient humidity	35 to 85% RH, storage: 35 to 85%RH	
Protection		IP65F for front panel	
Accessory		Fixing bracket: 4EA, Battery(included)	
Approval		CE	
Unit weight		Approx. 520g	

※1: Language can be customized.
※Environment resistance is rated at no freezing or condensation.

Graphic panel + PLC function Logic panel LP-S044

■ Specifications

Model		LP-S044-S1D0-C5T-A	LP-S044-S1D0-C5R-A	LP-S044-S1D1-C5T-A	LP-S044-S1D1-C5R-A
Appearances		CE K 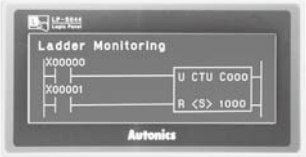			
I/O connector type		Terminal block connector	Ribbon cable connector	Terminal block connector	Ribbon cable connector
Power supply		24VDC			
Allowable voltage range		90 to 110% of power supply			
Power consumption		Max. 3.6W			
Display performance	LCD type	4.4inch STN Blue Negative			
	Resolution	240×80 dots			
	Display area	112.8mm×37.6mm			
	Color	MONO(blue, white)			
	LCD view angle	Top/Bottom/Left/Right 30° in each direction			
	Backlight	White LED			
	Brightness	Adjustable by software			
Graphic drawing performance	Language※1	English, Korean, Japanese, Chinese, Russian, Vietnamese, Portuguese			
	Text	• High resolution display up to 400 letters • 6×8, 8×8 ASCII character, high definition numbers • 8×16 ASCII characters, 16×16 regional characters(1 to 8 times bigger for width, 0.5 to 5 times bigger for height)			
	Graphic drawing memory	384 KB			
	Number of user screen	500 pages			
	Touch switch	Width 15×Height 4 = 60			
Control performance	Command	Basic command : 28, application command : 220			
	Program capacity	8K step			
	Processing time	Average : 6 to 7μs/step			
	I/O control type	Batch processing			
	Computer control mode	Repeated-doubling method, interrupt processing			
	Device range	*Refer to LP-S044 user manual			
Serial interface		Each port of RS232C, RS422(asynchronous method)		Two ports of RS232C(asynchronous method)	
Real-time controller		RTC embedded			
Battery life cycle		Approx. 3 years at 25℃			
Insulated resistance		Min. 100MΩ(at 500VDC megger)			
Ground		3rd grounding(max. 100Ω)			
Noise trength		± 0.5kV the square wave noise(pulse width : 1μs) by the noise simulator			
Dielectric strength		500VAC(50/60Hz) for a minute			
Vibration	Mechanical	0.75mm amplitude at frequency of 10 to 55Hz(for 1 min.) in each of X, Y, Z directions for 1 hour			
	Malfunction	0.5mm amplitude at frequency of 10 to 55Hz(for 1 min.) in each of X, Y, Z directions for 10 min.			
Shock	Mechanical	300m/s²(approx. 30G) in each of X, Y, Z directions for 3 times			
	Malfunction	100m/s²(approx. 10G) in each of X, Y, Z directions for 3 times			
Environ -ment	Ambient temperature	0 to 50℃, storage : -20 to 60℃			
	Ambient humidity	35 to 85% RH, storage : 35 to 85% RH			
Protection ratings		IP65F(for front panel)			
Accessory		Fixing bracket : 4EA, Rubber waterproof ring, Battery included			
Approval		CE K			
Weight※2		Approx. 454g(approx. 312g)			

※1: Language can be customized.
※2: This weight is with packaging and the weight in parentheses is only unit weight.
※Environment resistance is rated at no freezing or condensation.

7inch wide screen, TFT Color LCD type
Graphic panel + PLC function Logic panel LP-S070

■ Specifications

Model		LP-S070-T9D6-C5T	LP-S070-T9D6-C5R	LP-S070-T9D7-C5T	LP-S070-T9D7-C5R
Appearances		NEW			
I/O connector type		Terminal block connector	Ribbon cable connector	Terminal block connector	Ribbon cable connector
Power supply		24VDC			
Allowable voltage range		90 to 110% of power supply			
Power consumption		Max. 7.2W			
Display performance	LCD type	7 inch TFT Color LCD			
	Resolution	800×480 dots			
	Display area	152.4mm×94.44mm			
	Color	16,777,216 color			
	LCD view angle	Within each 50°/ 60°/ 65°/ 65° of top/bottom/left/right			
	Backlight	White LED			
	Brightness	Adjustable by software			
Graphic drawing performance	Language※1	English, Korean			
	Text	• Vector font • 6×8, 8×8 ASCII character, high definition numbers • 8×16 ASCII characters, 16×16 regional characters(1 to 8 times bigger for width, 0.5 to 5 times bigger for height)			
	Graphic drawing memory	16MB			
	Number of user screen	500 pages			
	Touch switch	Analog touch			
Control performance	Command	Basic command : 28, application command : 233			
	Program capacity	8K step			
	Processing time	Average : Approx. 2us/basic command, application command			
	I/O control type	Batch processing			
	Computer control mode	Repeated-doubling method, interrupt processing			
	Device range	*Refer to LP-S070 user manual			
	Special function	Positioning function *Refer to LP-S070 user manual			
Serial interface		Asynchronous method: Each port of RS232C, RS422			
		Each port of RS232C, RS422		Two ports of RS232C	
USB interface		Each of USB Host, USB Device(Version 1.1)			
Ethernet interface		IEEE802.3(U), 10/100Base-T			
Real-time controller		RTC embedded			
Battery life cycle		Approx. 3 years at 25℃			
Insulated resistance		Min. 100MΩ(at 500VDC megger)			
Ground		3rd grounding(max. 100Ω)			
Noise immunity		The squre wave noise(pulse width 1μs) by the noise simulator with ± 0.5kV			
Withstanding voltage		500VAC 50/60Hz for a minute			
Vibra-tion	Mechanical	0.75mm amplitude at frequency of 10 to 55Hz(for 1 min.) in each of X, Y, Z directions for 1 hour			
	Malfunction	0.5mm amplitude at frequency of 10 to 55Hz(for 1 min.) in each of X, Y, Z directions for 10 min.			
Shock	Mechnical	300m/s²(approx. 30G) in each of X,Y,Z directions for 3 times			
	Malfunction	100m/s²(approx. 10G) in each of X,Y,Z directions for 3 times			
Environ-ment	Ambient temperature	0 to 50℃, storage: -20 to 60℃			
	Ambient humidity	35 to 85%RH, storage: 35 to 85%RH			
Protection		IP65F(for front panel)			
Accessory		Fixing bracket: 4EA, Battery(included)			
Approval		CE K			
Unit weight		Approx. 540g			

※1: Language can be customized.

※Environment resistance is rated at no freezing or condensation.

■ Input/Output performance

• LP-S044

Input performance		Output performance	
Input point	16 points	Output point	16 points
Insulation method	Photo coupler insulation	Insulation method	Photo coupler insulation
Voltage range	19.2 to 28.8VDC	Voltage range	19.2 to 28.8VDC
Rated input voltage	24VDC	Rated input voltage	24VDC
Rated input current	Approx. 4mA	Max. load current	0.1A/1point, 1A/1COM
Input resistance	5.6kΩ	Max. voltage falling when ON	Max. 0.2VDC
Response time	1ms	Response time	1ms
Common method	16 points/1COM	Common method	16 points/1COM

• LP-S070

Input performance		Output performance	
Input point	16 points	Output point	16 points
Insulation method	Photo coupler insulation	Insulation method	Photo coupler insulation
Voltage range	19.2 to 28.8VDC	Voltage range	19.2 to 28.8VDC
Rated input voltage	24VDC	Rated input voltage	24VDC
Input resistance	Contact X0 to X5: Approx. 10mA Contact X6 to XF: Approx. 4mA	Max. load current	0.1A/1point, 1.6A/1COM
Input resistance	Contact X0 to X5: 2.2kΩ, Contact X6 to XF: 5.6kΩ	Max. voltage falling when ON	Max. 0.2VDC
Response time	1ms	Response time	1ms
Common method	16 points/1COM	Common method	16 points/1COM
Acceptable wire	0.3 to 0.7mm²	Acceptable wire	0.3 to 0.7mm²

■ Dimensions

(unit: mm)

• LP-S044

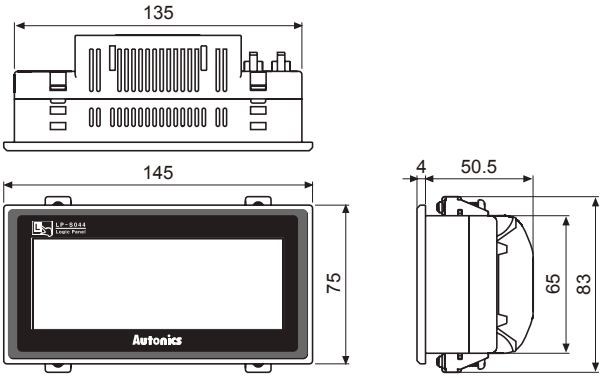

• LP-S070

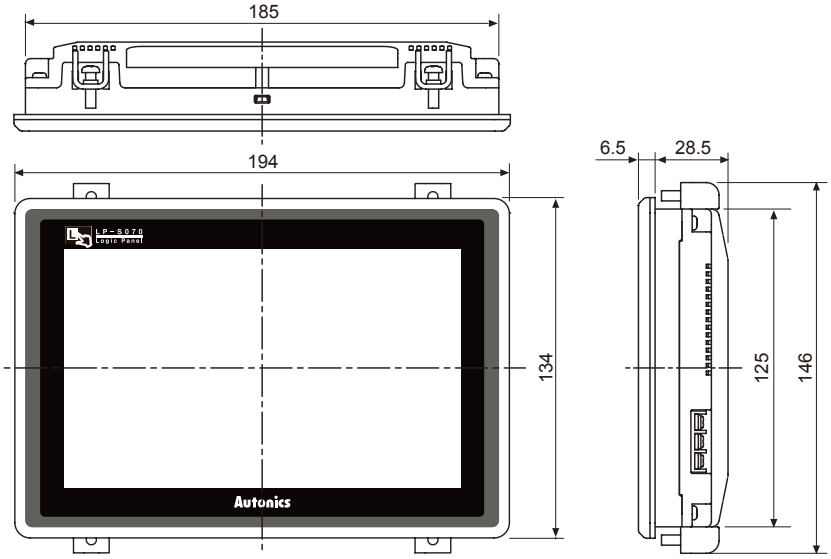

- **GP-S044**

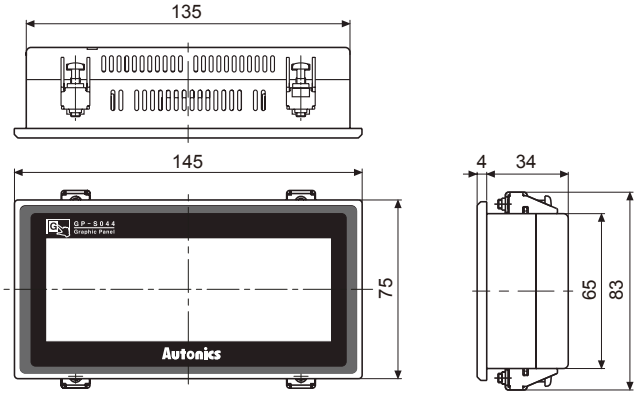

- **GP-S057**

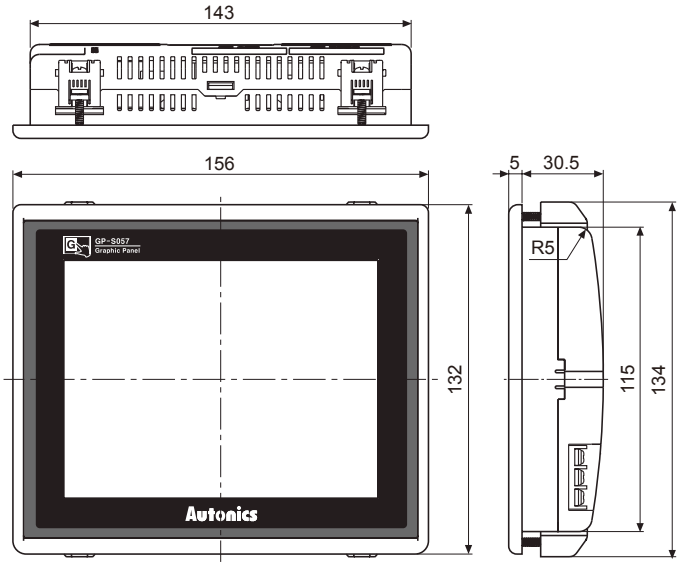
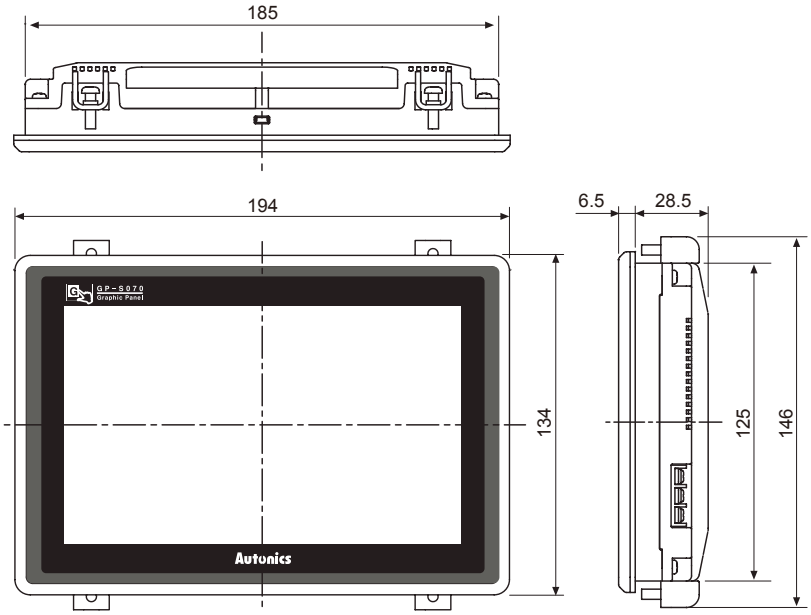
- **GP-S070**